Inch-size One-touch Fittings

Series KQ2

Applicable Tubing — Inch Size Thread — UNF, NPT

KQ2: White body
KQ : Black body

Guide

Collet

Chuck

Accepts nylon, soft nylon and polyurethane tubes. Has large retaining force.

Release button (Red)

KQ2: Orange
KQ : Red
Low disconnecting force.
When the fitting is removed from the tubing, the chuck and collet are released, thus preventing them from biting into the tube excessively.

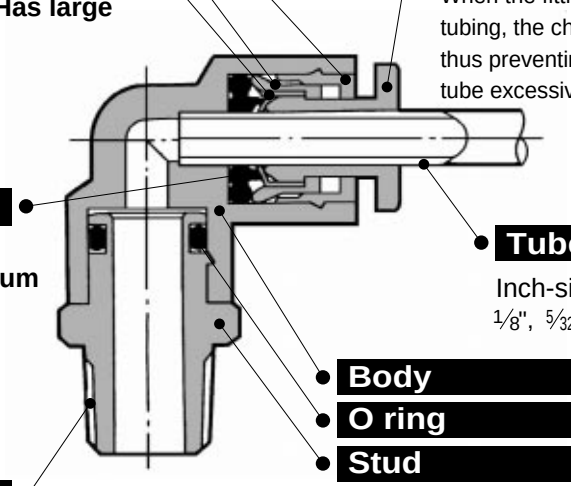

Packing

Can be used for a wide range of pressures from a low vacuum up to a pressure of 1.0MPa.
The use of a special profile ensures sealing and reduces resistance when the tube is inserted.

Tube

Inch-sizes
1/8", 5/32", 3/16", 1/4", 5/16", 3/8", 1/2"

Body

O ring

Stud

Thread

UNF, NPT

Effective when piping in a confined spaces.
The body and threaded portion can turn independently.

PAT.

Color

Series	Body	Release button
KQ2	White	Orange
KQ	Black	Red

Applicable Tubing

Tube material	Nylon, Soft nylon, Polyurethane
Tube O.D. (inch)	ø1/8, ø5/32, ø3/16, ø1/4, ø5/16, ø3/8, ø1/2

Specifications

Operating fluid		Air, Water (1)
Max. operating pressure		1.0MPa
Proof pressure		3.0MPa
Ambient and fluid temperature		–5 to 60°C (Water: 0 to 40°C)
Thread	Thread portion	ANSI/ASMEB1.20.1-1983 (NTP thread) JIS B0212 2A, Class 2B (UNF thread)
	Nut	JIS B 0212 2A, Class 2B (UNF thread)
Sealant (Thread portion)		With sealant

Note1) Applicable for general industry water. Consult SMC if using for other kind of fluids. Surge pressure must be under the max. operating pressure.

Component Materials

Body	C3604BD, PBT, PP
Stud	C3604BD (Thread portion)
Chuck	Stainless Steel (SUS304)
Guide	Stainless Steel (SUS304), C3604BD, POM
Collet	POM
Release button	POM
Packing, O ring	NBR
Gasket	PVC

Model

Male connector
KQ2H P.2.2-11

Used to pipe in the same direction from female threaded portion.
Most common style.

Extended male elbow
KQ2W P.2.2-12

For when the elbow extends over a standard elbow for easier of connection/disconnection of tubing.

Plug-in "Y"
KQ2U P.2.2-14

Used to branch tubing in the same direction from One-touch fittings.

Straight union
KQ2H P.2.2-11

Used to connect tubes in the same direction.

Male branch tee
KQ2T P.2.2-13

Used to branch line from female thread in both 90° directions.

Branch " Y"
KQ2U P.2.2-14

Used to branch line in the same direction from female thread.

Male elbow
KQ2L P.2.2-11

Used to pipe at right angle to female threaded portion.
Most common style.

Union tee
KQ2T P.2.2-13

Used to connect tubes in both 90° directions.

Bulkhead union
KQ2E P.2.2-15

Used for junction connection of two tubes for installation of a panel.

Union elbow
KQ2L P.2.2-12

Used to connect tubes at right angles.

Male run tee
KQ2Y P.2.2-13

Used for a branch line in the same direction from female thread and in 90° directions.

Bulkhead connector
KQ2E P.2.2-15

Used for transit connection of a tube and a male screw for installation of a panel.

Plug-in elbow
KQ2L P.2.2-12

Used to change by 90° in a tube fetching direction from One-touch fittings.

Plug-in reducer
KQ2R P.2.2-14

Used to change size of One-touch fittings.

Plug
KQ2P, KQP P.2.2-15

Used to shut unused One-touch fittings.
KQ2P (Orange)
KQP (Orange)

Reducer elbow
KQ2L P.2.2-12

Used to change by 90° in tube fetching direction from One-touch fittings and to size down.

Union "Y"
KQ2U P.2.2-14

Used to connect tubes in the same direction.

How to Order

KQ 2 H 05 — 34 S

One-touch fitting

Color

Symbol	Body	Release button
2	White	Orange
—	Black	Red

Model

H	Male connector*
	Straight union
L	Male elbow*
	Union elbow
	Plug-in elbow
	Reducer elbow
W	Extended male elbow*
T	Male branch tee*
	Union tee
Y	Male run tee*
U	Union "Y"*
	Plug-in "Y"*
	Branch "Y"
R	Plug-in reducer
E	Bulkhead union
	Bulkhead connector

With *mark: With sealant style is available.

Applicable tube diameter

01	1/8
03	5/32
05	3/16
07	1/4
09	5/16
11	3/8
13	1/2

Port size

32	10-32UNF
33	NPT 1/6
34	NPT 1/8
35	NPT 1/4
36	NPT 3/8
37	NPT 1/2
00	Same dia. tube
99	Same dia. rod
01	1/8 Tube
03	5/32 Tube
05	3/16 Tube
07	1/4 Tube
09	5/16 Tube
11	3/8 Tube
13	1/2 Tube

Sealant

—	Without sealant
S	Sealant

Accessory

Symbol	Description
KQ2P, KQP	Plug (Orange)

*Additional models are available. See p.2.2-15.

Male connector: KQ2H

01-32
KQ2H03-32
07-32

<KQ2H05-32>

<NPT>

Tube O.D. (inch)	Thread UNF NPT	Part No.	H (Hex.)	øD (1)	L	A	M	Min. hole dia.	Weight (g)
1/8	10-32UNF	KQ2H01-32	7	—	16.7	13.7	12.7	2.5	2
	1/16	KQ2H01-33S	11.11	—	22	18*	15.5		7
	1/8	KQ2H01-34S		—					9
	1/4	KQ2H01-35S	14.29	—	19.5	13.5*			16
5/32	10-32UNF	KQ2H03-32	8	—	17	14	12.7	2.5	2.4
	1/16	KQ2H03-33S	11.11	—	22	18*	16	3	7
	1/8	KQ2H03-34S		—					9
	1/4	KQ2H03-35S	14.29	—	19.5	13.5*			16
3/16	10-32UNF	KQ2H05-32	8	11	24	20.4	16.5	2.5	6
	1/8	KQ2H05-34S	12.7	—	22	18*		3.5	11
	1/4	KQ2H05-35S	14.29	—	21	15*			12
1/4	10-32UNF	KQ2H07-32	11.11	—	18.4	15.4	13.6	2.5	3.3
	1/8	KQ2H07-34S	14.29	—	22.5	18.5*	17	4.6	10
	1/4	KQ2H07-35S		—	23	17*			15
	3/8	KQ2H07-36S	17.46	—	22	16.5*			27
5/16	1/8	KQ2H09-34S	14.29	—	28.5	24.5*	18.5	6	15
	1/4	KQ2H09-35S		—	26.5	20.5*			16
	3/8	KQ2H09-36S	17.46	—	22	15.5*			24
3/8	1/8	KQ2H11-34S	17.46	—	30.5	26.5*	21	6	29
	1/4	KQ2H11-35S		—	33.5	27.5*		7	31
	3/8	KQ2H11-36S		—	29	22.5*			29
	1/2	KQ2H11-37S	22.23	—	26.5	18.5*			46
1/2	1/4	KQ2H13-35S	22.23	—	34.5	28.5*	22	9	44
	3/8	KQ2H13-36S		—	33	26.5*		9.6	44
	1/2	KQ2H13-37S		—	30	22*			44

∗ Reference dimensions after NPT thread installation.
Note1) øD: max. diameter

01-32
KQ2H03-32
07-32

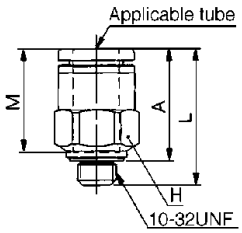

<KQ2H05-32>

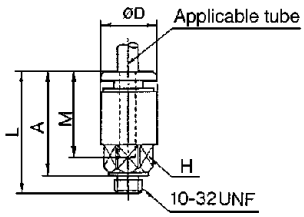

<NPT>

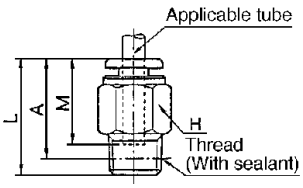

Straight union: KQ2H

Tube O.D. (inch)	Part No.	øD (1)	L	M	Min. hole dia.	Weight (g)
1/8	KQ2H01-00	9.6	31.5	15.5	2.5	3
5/32	KQ2H03-00	10.4	32.5	16	3	3
3/16	KQ2H05-00	11.4	34	16.5	3.5	4
1/4	KQ2H07-00	13.2	34.5	17	4.6	4
5/16	KQ2H09-00	15.2	38.5	18.5	6	6
3/8	KQ2H11-00	17.9	42.5	21	7	11
1/2	KQ2H13-00	21.7	44.5	22	9.6	16

Note1) øD: max. diameter

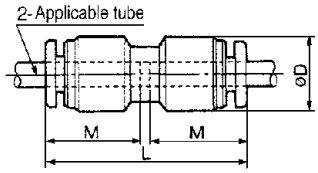

Male elbow: KQ2L

01-32
KQ2L03-32
07-32

<KQ2L05-32>

<NPT>

Tube O.D. (inch)	Thread UNF NPT	Part No.	H (Hex.)	øD1 (1)	øD2	L1	L2	A	M	Min. hole dia.	Weight (g)
1/8	10-32UNF	KQ2L01-32	7	8.4	—	15.3	13.2	14	12.7	2.5	2.5
	1/16	KQ2L01-33S	11.11	9.6	10	17.5	21.5	22.5*	15.5		8
	1/8	KQ2L01-34S									
	1/4	KQ2L01-35S	14.29				25.5	24.5*			18
5/32	10-32UNF	KQ2L03-32	7	9.3	—	15.6	13.7	15.4	12.7	2.5	2.7
	1/16	KQ2L03-33S	11.11	10.4	10	18	22	23*	16	3	8
	1/8	KQ2L03-34S									9
	1/4	KQ2L03-35S	14.29				26	25*			18
3/16	10-32UNF	KQ2L05-32	11.11	11.4	10	19.5	20	22	16.5	2.5	5
	1/8	KQ2L05-34S					22.5	24*		3.5	10
	1/4	KQ2L05-35S	14.29				26.5	26*			19
1/4	10-32UNF	KQ2L07-32	7	12	—	16.1	15.1	18.1	13.6	2.5	3.2
	1/8	KQ2L07-34S	11.11	13.2	10	20.5	23.5	26*	17	4.6	10
	1/4	KQ2L07-35S	14.29				27.5	28*			20
	3/8	KQ2L07-36S	17.46				29.5	30*			32
5/16	1/8	KQ2L09-34S	12.7	15.2	12	23.5	24.5	28*	18.5	6	12
	1/4	KQ2L09-35S	14.29				28.5	30*			20
	3/8	KQ2L09-36S	17.46				30.5	31.5*			28
3/8	1/8	KQ2L11-34S	17.46	17.9	17	25.5	26.5	31.5*	21	6	16
	1/4	KQ2L11-35S					29.5	32.5*		7	23
	3/8	KQ2L11-36S					31.5	34*			33
	1/2	KQ2L11-37S	22.23				35.5	36.5*			59
1/2	1/4	KQ2L13-35S	17.46	21.7	17	28	31.5	36.5*	22	9	28
	3/8	KQ2L13-36S					33.5	38.5*		9.6	36
	1/2	KQ2L13-37S	22.23				37.5	40*			62

∗ Reference dimensions after NPT thread installation.
Note1) øD1: max. diameter

01-32
KQ2L03-32
07-32

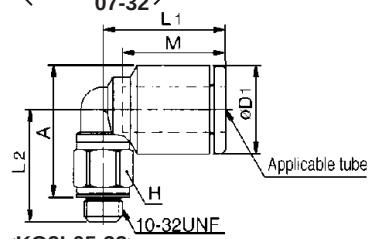

<KQ2L05-32>

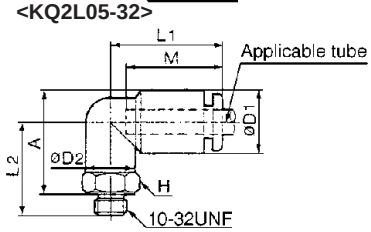

<NPT>

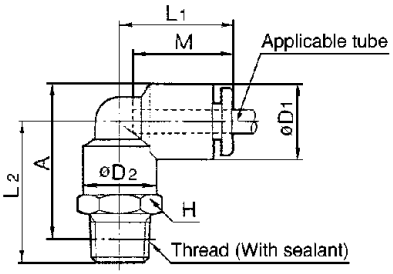

Union elbow: KQ2L

Tube O.D. (inch)	Part No.	øD (1)	L	Q	M	Min. hole dia.	Weight (g)
1/8	**KQ2L01-00**	9.6	17.5	4.3	15.5	2.5	3
5/32	**KQ2L03-00**	10.4	18	4.5	16	3	4
3/16	**KQ2L05-00**	11.4	19.5	4.8	16.5	3.5	5
1/4	**KQ2L07-00**	13.2	20.5	5.3	17	4.6	5
5/16	**KQ2L09-00**	15.2	23	6	18.5	6	7
3/8	**KQ2L11-00**	17.9	26	6.6	21	7	13
1/2	**KQ2L13-00**	21.7	29	7.8	22	9.6	18

Note1) øD: max. diameter

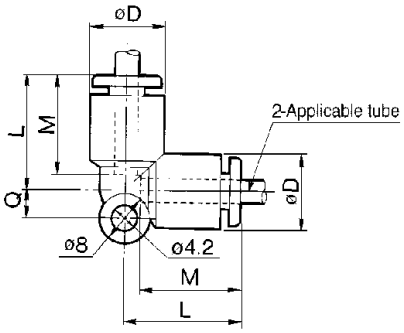

Plug-in elbow: KQ2L

Tube O.D. (inch)	Fitting size ød (inch)	Part No.	øD1 (1)	øD2	L1	L2	A	M	Min. hole dia.	Weight (g)
1/8	1/8	**KQ2L01-99**	9.6	7	17	24.5	14	15	2.2	3
5/32	5/32	**KQ2L03-99**	10.4	8	18	25	14.5	16	2.5	3
3/16	3/16	**KQ2L05-99**	11.4	10	19.5	34	23.5	16.5	3.5	7
1/4	1/4	**KQ2L07-99**	13.2	10	20	27.5	17.5	17	4.6	8
5/16	5/16	**KQ2L09-99**	15.2	12	22.5	31.5	21	18.5	6	6
3/8	3/8	**KQ2L11-99**	17.9	13.6	25	35	23	21	7	19
1/2	1/2	**KQ2L13-99**	21.7	17	28	44.5	34	22	9.6	27

Note1) øD1: max. diameter

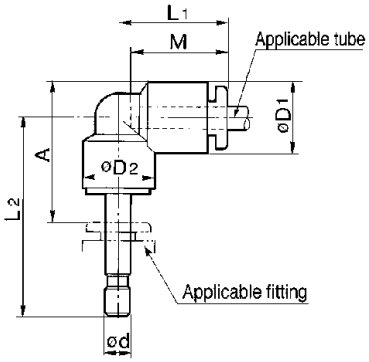

Reducer elbow: KQ2L

Tube O.D. (inch)	Fitting size ød (inch)	Part No.	øD1 (1)	øD2	L1	L2	A	M	Min. hole dia.	Weight (g)
1/8	5/32	**KQ2L01-03**	9.6	7	17	25	13.5	15.5	2.2	3
	3/16	**KQ2L01-05**		10	17.5	33	21.5		2.5	7
5/32	3/16	**KQ2L03-05**	10.4	10	18	33.5	22.5	16	3	6
	1/4	**KQ2L03-07**		8		26	14.5		2.5	3
3/16	1/4	**KQ2L05-07**	11.4	10	19	26.5	15.5	16.5	3.5	8
	5/16	**KQ2L05-09**			19.5	35.5	23			11
1/4	5/16	**KQ2L07-09**	13.2	10	20.5	36.5	24.5	17	4.6	12
	3/8	**KQ2L07-11**				39.5	23.5			17
5/16	3/8	**KQ2L09-11**	15.2	12	23.5	40.5	27.5	18.5	6	17
	1/2	**KQ2L09-13**				41.5				30
3/8	1/2	**KQ2L11-13**	17.9	17	25.5	43	30	21	7	25

Note1) øD1: max. diameter

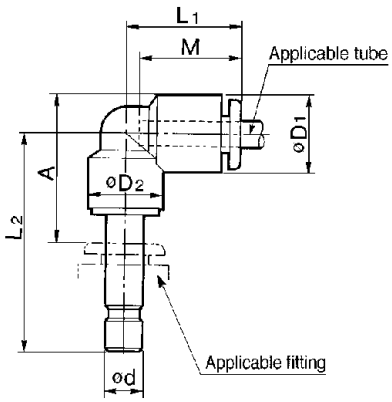

Extended male elbow: KQ2W

Tube O.D. (inch)	Thread NPT	Part No.	H (Hex.)	øD1 (1)	øD2	L1	L2	A*	M	Min. hole dia.	Weight (g)
1/8	1/8	**KQ2W01-34S**	11.11	9.6	10	17.5	37	38	15.5	2.5	19
	1/4	**KQ2W01-35S**	14.29				43	42			41
5/32	1/8	**KQ2W03-34S**	11.11	10.4	10	18	37.5	38.5	16	3	19
	1/4	**KQ2W03-35S**	14.29				43.5	42.5			41
3/16	1/8	**KQ2W05-34S**	11.11	11.4	10	19.5	38	40	16.5	3.5	41
	1/4	**KQ2W05-35S**	14.29				44	43.5			19
1/4	1/8	**KQ2W07-34S**	11.11	13.2	10	20.5	40.5	43	17	4.6	20
	1/4	**KQ2W07-35S**	14.29				46.5	47			42
	3/8	**KQ2W07-36S**	17.46				48.5	49			69
5/16	1/8	**KQ2W09-34S**	12.7	15.2	12	23.5	43.5	47	18.5	6	30
	1/4	**KQ2W09-35S**	14.29				49.5	51			47
	3/8	**KQ2W09-36S**	17.46				51.5	53			74
3/8	1/4	**KQ2W11-35S**	17.46	17.9	17	25.5	56	59	21	7	69
	3/8	**KQ2W11-36S**					58	61			76
	1/2	**KQ2W11-37S**	22.23				64.5	65.5			147
1/2	1/4	**KQ2W13-35S**	17.46	21.7	17	28	58	63	22	9	72
	3/8	**KQ2W13-36S**					60	64.5		9.6	78
	1/2	**KQ2W13-37S**	22.23				66.5	69			149

∗ Reference dimensions after NPT thread installation.
Note1) øD1: max. diameter

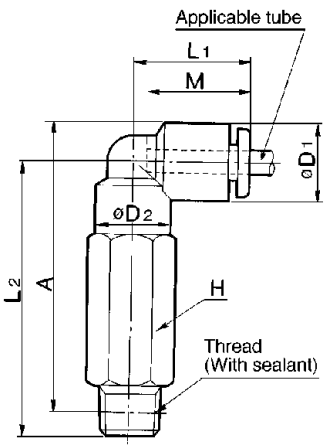

Male branch tee: KQ2T

<10-32UNF>

<R(PT)>

Tube O.D. (inch)	Thread UNF NPT	Part No.	H (Hex.)	øD1 (1)	øD2	L1	L2	A*	M	Min. hole dia.	Weight (g)
1/8	10-32UNF	KQ2T01-32	7	8.4	—	15.3	13.2	14.4	12.7	2.5	3.2
	1/16	KQ2T01-33S	11.11	9.6	10	17.5	21.5	22.5*	15.5		10
	1/8	KQ2T01-34S									
	1/4	KQ2T01-35S	14.29				25.5	24.5*			20
5/32	10-32UNF	KQ2T03-32	7	9.3	—	15.6	13.7	15.4	12.7	2.5	3.5
	1/16	KQ2T03-33S	11.11	10.4	10	18	22	23*	16	3	10
	1/8	KQ2T03-34S									11
	1/4	KQ2T03-35S	14.29				26	25*			20
3/16	1/8	KQ2T05-34S	11.11	11.4	10	19.5	22.5	24*	16.5	3.5	12
	1/4	KQ2T05-35S	14.29				26.5	26*			21
1/4	10-32UNF	KQ2T07-32	7	12	—	16.1	15.1	18.1	13.6	2.5	4.4
	1/8	KQ2T07-34S	11.11	13.2	10	20.5	23.5	26*	17	4.6	11
	1/4	KQ2T07-35S	14.29				27.5	28*			21
	3/8	KQ2T07-36S	17.46				29.5	30*			34
5/16	1/8	KQ2T09-34S	12.7	15.2	12	23	24.5	28*	18.5	6	15
	1/4	KQ2T09-35S	14.29				28.5	30*			23
	3/8	KQ2T09-36S	17.46				30.5	31.5*			35
3/8	1/8	KQ2T11-34S	17.46	17.9	17	25.5	26.5	31.5*	21	6	31
	1/4	KQ2T11-35S					29.5	32.5*		7	29
	3/8	KQ2T11-36S					31.5	34.5*			38
	1/2	KQ2T11-37S	22.23				35.5	36.5*			64
1/2	1/4	KQ2T13-35S	17.46	21.7	17	28	31.5	36.5*	22	9	34
	3/8	KQ2T13-36S					33.5	38.5*		9.6	43
	1/2	KQ2T13-37S	22.23				37.5	40*			69

<10-32UNF>

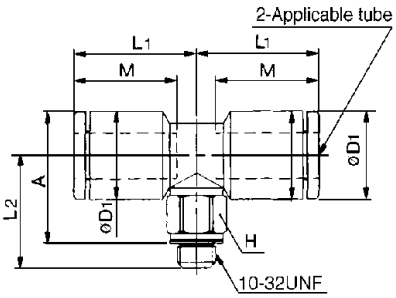

<R(PT)>

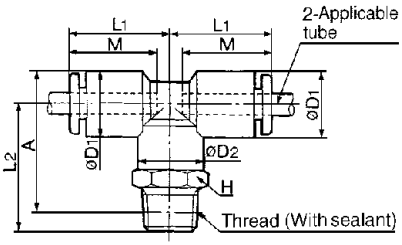

* Reference dimensions after NPT thread installation.
Note1) øD1: max. diameter

Union tee: KQ2T

Tube O.D. (inch)	Part No.	øD (1)	L	Q	M	Min. hole dia.	Weight (g)
1/8	KQ2T01-00	9.6	17.5	4.3	15.5	2.5	5
5/32	KQ2T03-00	10.4	18	4.5	16	3	4
3/16	KQ2T05-00	11.4	19.5	4.8	16.5	3.5	7
1/4	KQ2T07-00	13.2	20.5	5.3	17	4.6	8
5/16	KQ2T09-00	15.2	23	6	18.5	6	11
3/8	KQ2T11-00	17.9	26	6.6	21	7	18
1/2	KQ2T13-00	21.7	29	7.8	22	9.6	26

Note1) øD1: max. diameter

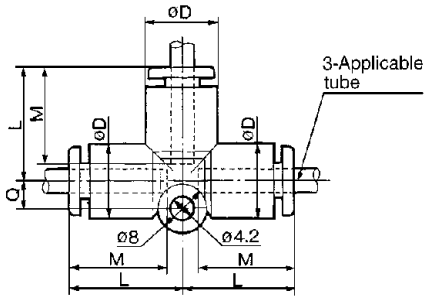

Male run tee: KQ2Y

Tube O.D. (inch)	Thread NPT	Part No.	H (Hex.)	øD1 (1)	øD2	L1	L2	A*	M	Min. hole dia.	Weight (g)
1/8	1/16	KQ2Y01-33S	11.11	9.6	10	17.5	21.5	35	15.5	2.5	10
	1/8	KQ2Y01-34S									
	1/4	KQ2Y01-35S	14.29				25.5	37			20
5/32	1/16	KQ2Y03-33S	11.11	10.4	10	18	22	36	16	3	10
	1/8	KQ2Y03-34S									11
	1/4	KQ2Y03-35S	14.29				26	38			20
3/16	1/8	KQ2Y05-34S	11.11	11.4	10	19.5	22.5	38	16.5	3.5	12
	1/4	KQ2Y05-35S	14.29				26.5	40			21
1/4	1/8	KQ2Y07-34S	11.11	13.2	10	20.5	23.5	44	17	4.6	11
	1/4	KQ2Y07-35S	14.29				27.5	42			21
	3/8	KQ2Y07-36S	17.46				29.5	44			34
5/16	1/8	KQ2Y09-34S	12.7	15.2	12	23.5	24.5	40	18.5	6	15
	1/4	KQ2Y09-35S	14.29				28.5	46			23
	3/8	KQ2Y09-36S	17.46				30.5	48			35
3/8	1/4	KQ2Y11-35S	17.46	17.9	17	25.5	29.5	49	21	7	29
	3/8	KQ2Y11-36S					31.5	51			38
	1/2	KQ2Y11-37S	22.23				35.5	53			64
1/2	1/4	KQ2Y13-35S	17.46	21.7	17	28	31.5	53.5	22	9	34
	3/8	KQ2Y13-36S					33.5	55.5		9.6	43
	1/2	KQ2Y13-37S	22.23				37.5	57			69

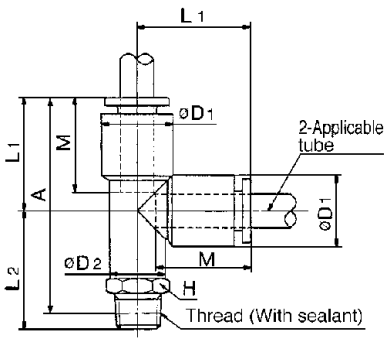

* Reference dimensions after NPT thread installation.
Note1) øD1: max. diameter

Plug-in reducer: KQ2R

Tube O.D. (inch)	Fitting size ød (inch)	Part No.	øD (1)	L	A	M	Min. hole dia.	Weight (g)
1/8	5/32	**KQ2R01-03**	9.6	34.5	18.5	15.5	2.5	2
	3/16	**KQ2R01-05**	9.2	34	17.5			7
	1/4	**KQ2R01-07**			17			9
5/32	3/16	**KQ2R03-05**	10	34	17.5	16	3	8
	1/4	**KQ2R03-07**	10.4	34.5				9
3/16	1/4	**KQ2R05-07**	11.4	34.5	18.5	16.5	3.5	4
	5/16	**KQ2R05-09**	10.7	36.5	18			14
1/4	5/16	**KQ2R07-09**	13.2	37	18.5	17	4.6	17
	3/8	**KQ2R07-11**		40	19.5			19
5/16	3/8	**KQ2R09-11**	14	40	19	18.5	6	24
	1/2	**KQ2R09-13**		41				32
3/8	1/2	**KQ2R11-13**	17.9	44	22	21	7	32

Note1) øD: max. diameter

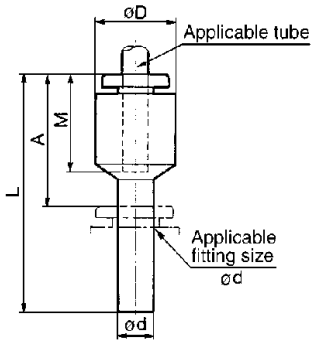

Union "Y": KQ2U

Tube O.D. (inch)	Part No.	øD (1)	L1	L2	P	Q	M	Min. hole dia.	Weight (g)
1/8	**KQ2U01-00**	9.6	33	17.5	9.6	9	15.5	2.5	6
5/32	**KQ2U03-00**	10.4	34	18	10.4	9.7	16	3	7
3/16	**KQ2U05-00**	11.4	36.5	20.5	11.4	10.6	16.5	3.5	9
1/4	**KQ2U07-00**	13.2	38	21.5	13.2	12	17	4.6	9
5/16	**KQ2U09-00**	15.2	42.5	24.5	15.2	13.7	18.5	6	11
3/8	**KQ2U11-00**	17.9	48	27.5	17.9	15.6	21	7	16

Note1) øD: max. diameter

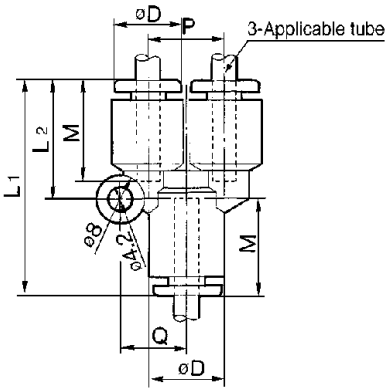

Plug-in "Y": KQ2U

Tube O.D. (inch)	Fitting size ød (inch)	Part No.	øD (1)	L1	L2	P	Q	A	M	Min. hole dia.	Weight (g)
1/8	1/8	**KQ2U01-99**	9.6	50	17.5	9.6	9	35	15.5	2	10
5/32	5/32	**KQ2U03-99**	10.4	51.5	18	10.4	9.7	35.5	16	2.5	12
3/16	3/16	**KQ2U05-99**	11.4	56	20.5	11.4	10.6	39.5	16.5	3.5	17
1/4	1/4	**KQ2U07-99**	13.2	56.5	21.5	13.2	12	39.5	17	4.6	19
5/16	5/16	**KQ2U09-99**	15.2	64.5	24.5	15.2	13.7	46	18.5	6	22

Note1) øD: max. diameter

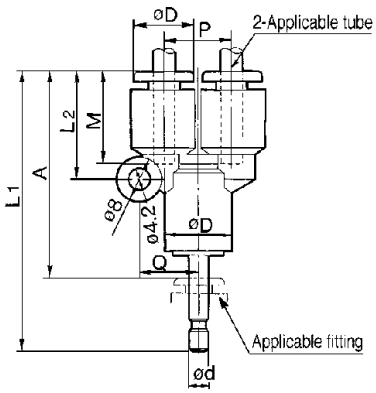

Branch "Y": KQ2U

Tube O.D. (inch)	Thread NPT	Part No.	H (Hex.)	øD (1)	L	P	Q	A*	M	Min. hole dia.	Weight (g)
1/8	1/8	**KQ2U01-34S**	12.7	9.6	40.5	9.6	9	36.5	15.5	2.5	14
	1/4	**KQ2U01-35S**	14.29		44.5			38.5			
5/32	1/8	**KQ2U03-34S**	12.7	10.4	42	10.4	9.7	38	16	3	16
	1/4	**KQ2U03-35S**	14.29		46			40			
3/16	1/8	**KQ2U05-34S**	12.7	11.4	44	11.4	10.6	40	16.5	3.5	18
	1/4	**KQ2U05-35S**	14.9		48.5			42.5			
1/4	1/8	**KQ2U07-34S**	14.29	13.2	46.5	13.2	12	42.5	17	4.6	20
	1/4	**KQ2U07-35S**			49.5			43.5			
	3/8	**KQ2U07-36S**	17.46		51.5			45			
5/16	1/8	**KQ2U09-34S**	17.46	15.2	52.5	15.2	13.7	48.5	18.5	6	21
	1/4	**KQ2U09-35S**			55.5			49.5			22
	3/8	**KQ2U09-36S**			56.5			50			35
3/8	1/4	**KQ2U11-35S**	19.05	17.9	60	17.9	15.6	54	21	7	42
	3/8	**KQ2U11-36S**			61			54.5			43
	1/2	**KQ2U11-37S**	22.23		64.5			56.5			56
1/2	1/4	**KQ2U13-35S**	22.23	21.7	64.5	21.7	18.8	58.5	22	9.6	31
	3/8	**KQ2U13-36S**			65.5			59			41
	1/2	**KQ2U13-37S**			68.5			60.5			68

* Reference dimensions after NPT thread installation.

Note1) øD: max. diameter

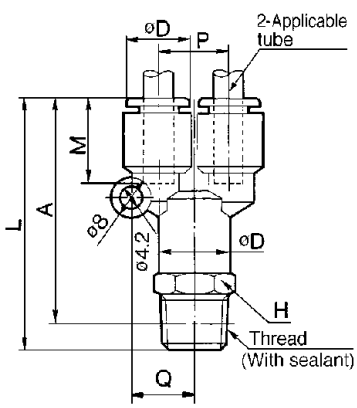

Bulkhead union: KQ2E

Tube O.D. (inch)	Part No.	Thread UNF	H (Hex.)	L	Mounting hole	M	Min. hole dia.	Weight (g)
1/8	**KQ2E01-00**	1/2-20	17.46	32.5	13.5	15.5	2.5	26
5/32	**KQ2E03-00**	1/2-20	17.46	32.5	13.5	16	3	26
3/16	**KQ2E05-00**	9/16-18	17.46	34	15	16.5	3.5	33
1/4	**KQ2E07-00**	9/16-18	17.46	34.5	15	17	4.6	33
5/16	**KQ2E09-00**	3/4-16	22.23	38	20	18.5	6	52
3/8	**KQ2E11-00**	7/8-14	25.4	42.5	23	21	7	70
1/2	**KQ2E13-00**	1-12	28.6	44.5	26	22	9.6	97

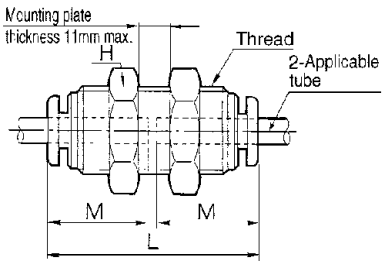

Bulkhead connector: KQ2E

Tube O.D. (inch)	Thread NPT	Part No.	Thread UNF	H_1 (Hex.)	H_2 (Hex.)	L_1	L_2	M	Min. hole dia.	Mounting hole	Weight (g)
1/8	1/4	**KQ2E01-35**	1/2-20	17.46	17.46	31	15	15.5	2.5	13.5	36
5/32	1/4	**KQ2E03-35**	1/2-20	17.46	17.46	31	15	16	3	13.5	36
3/16	1/8	**KQ2E05-34**	9/16-18	17.46	17.46	28	10	16.5	3.5	15	34
1/4	1/4	**KQ2E07-35**	9/16-18	17.46	17.46	32.5	14.5	17	4.6	15	34
5/16	3/8	**KQ2E09-36**	3/4-16	22.23	22.23	35	15	18.5	6	20	52
3/8	3/8	**KQ2E11-36**	7/8-14	25.4	25.4	37	14.5	21	7	23	96
1/2	3/8	**KQ2E13-36**	1-12	28.6	28.6	37	14	22	9.6	26	125
	1/2	**KQ2E13-37**	1-12			41.5	18				128

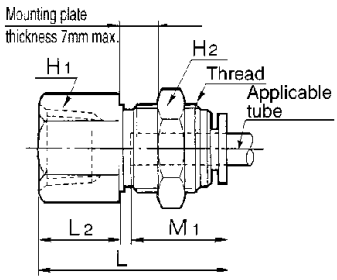

Plug: KQ2P, KQP

Fitting size ød (inch)	Part No.(1)	øD	L	A	Weight (g)
1/8	**KQ2P-01**	5	31.5	16	1
5/32	**KQ2P-03**	6	32	16	1
3/16	**KQ2P-05**	6.8	34	17.5	1
1/4	**KQ2P-07**	8.5	35	18	1
5/16	**KQ2P-09**	10	39	20.5	2
3/8	**KQ2P-11**	11.5	43	22	3.5
1/2	**KQ2P-13**	15	46	24	5

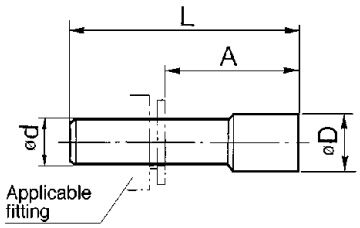

Inch-size One-touch Fittings Additional Models

● Available

Style	Model	Port size	Tube O.D. (inch) 1/8	5/32	3/16	1/4	5/16	3/8	1/2
Hex. socket head male connector	**KQ2S**	10-32UNF	●	●		●			
		NPT1/8		●	●	●	●	●	
		NPT1/4				●	●	●	●
		NPT3/8				●	●	●	●
		NPT1/2						●	●
45° male elbow	**KQ2K**	10-32UNF	●	●		●			
		NPT1/8	●	●	●	●	●	●	
		NPT1/4				●	●	●	●
		NPT3/8				●	●	●	●
		NPT1/2						●	●
Universal male elbow	**KQ2V**	10-32UNF	●	●		●			
		NPT1/8	●	●	●	●	●		
		NPT1/4				●	●	●	
		NPT3/8					●	●	●
		NPT1/2							●
Hex. socket head universal male elbow	**KQ2VS**	10-32UNF	●	●		●			
		NPT1/8	●	●	●	●	●		
		NPT1/4				●	●	●	
		NPT3/8					●	●	●
		NPT1/2							●
Double universal male elbow	**KQ2VD**	10-32UNF	●	●		●			
		NPT1/8	●	●	●	●			
		NPT1/4				●	●	●	
		NPT3/8				●	●	●	●
		NPT1/2					●	●	●
Universal female elbow	**KQ2VF**	10-32UNF	●	●		●			
		NPT1/8	●	●	●	●	●		
		NPT1/4				●	●	●	
		NPT3/8					●	●	●
		NPT1/2							●
Branch universal male elbow	**KQ2Z**	10-32UNF	●	●		●			
		NPT1/8	●	●	●	●	●		
		NPT1/4				●	●	●	
		NPT3/8					●	●	●
		NPT1/2							●

Style	Model	Port size	Tube O.D. (inch) 1/8	5/32	3/16	1/4	5/16	3/8	1/2
Triple universal male elbow	**KQ2VT**	10-32UNF	●	●		●			
		NPT1/8	●	●	●	●			
		NPT1/4				●	●	●	
		NPT3/8				●	●	●	●
		NPT1/2					●	●	●
Double branch universal male elbow	**KQ2ZD**	NPT1/8	●	●	●	●			
		NPT1/4				●	●	●	
		NPT3/8				●	●	●	●
		NPT1/2					●	●	●
Triple branch universal male elbow	**KQ2ZT**	NPT1/8	●	●	●	●			
		NPT1/4				●	●	●	
		NPT3/8				●	●	●	●
		NPT1/2					●	●	●
Female connector	**KQ2F**	NPT1/8	●	●		●	●		
		NPT1/4	●	●		●	●	●	
		NPT3/8				●	●	●	●
		NPT1/2						●	●
Female elbow	**KQ2LF**	NPT1/8	●	●		●			
		NPT1/4	●	●		●		●	
		NPT3/8				●		●	●
		NPT1/2						●	●
Different dia. straight	**KQ2H**	5/32	●						
		3/16		●					
		1/4	●	●	●				
		5/16				●			
		3/8				●	●		
		1/2					●	●	
		5/8							
Different dia. tee	**KQ2T**	5/32	●						
		3/16		●					
		1/4	●	●	●				
		5/16				●			
		3/8				●	●		
		1/2					●	●	

Style	Model	Port size	Tube O.D. (inch) 1/8	5/32	3/16	1/4	5/16	3/8	1/2
Different dia. union "Y"	**KQ2U**	5/32	●						
		3/16		●					
		1/4	●	●	●				
		5/16				●			
		3/8				●	●		
		1/2					●	●	
Cross	**KQ2TW**			●		●	●	●	●
Bulkhead male elbow	**KQ2LE**		●	●	●	●	●	●	●
Different dia. Plug-in "Y"	**KQ2X**	5/32	●						
		3/16		●					
		1/4			●				
		5/16				●			
Nipple	**KQ2N**		●	●	●	●	●	●	●
Reducer nipple	**KQ2N**	5/32	●						
		3/16	●	●					
		1/4		●	●				
		5/16			●	●			
		3/8				●	●		
		1/2					●	●	
Tube cap	**KQ2C**			●		●	●	●	

*Refer to p.2.1-11 and 2.1-12 for more information on styles.

Inch-size One-touch Fittings

Series KQ2

Applicable Tubing — Inch-size Thread — M, R(PT), Rc(PT)

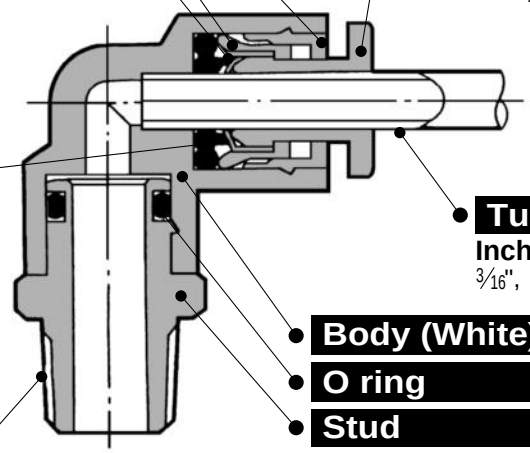

Guide

Collet

Chuck

Accepts nylon, soft nylon and polyurethane tubes.
Has high retaining force.

Release button (Orange)

Low disconnecting force.
When the fitting is removed from the tubing, the chuck and collet are released, thus preventing them from biting into the tube excessively.

Packing

Can be used for a wide range of pressures from a low vacuum up to a pressure of 1.0MPa.
The use of a special profile ensures sealing and reduces resistance when the tube is inserted.

Tubing

Inch-size
3/16", 1/4", 5/16", 3/8", 1/2"

Body (White)

O ring

Stud

Thread
M, R(PT), Rc(PT)

Effective when piping in confined spaces.
The body and threaded portion can turn independently.

PAT.

Applicable Tubing

Tube material	Nylon, Soft nylon, Polyurethane
Tube O.D. (inch)	ø3/16, ø1/4, ø5/16, ø3/8, ø1/2

Color

Series	Body	Release button
KQ2	White	Orange

Specifications

Fluid		Air, Water (1)
Max. operating pressure		1.0MPa
Proof pressure		3.0MPa
Ambient and fluid temperature		–5 to 60°C (Water: 5 to 40°C) (No freezing)
Thread	Thread portion	JIS B0203 (Taper pipe thread)
	Nut	JIS B0211, Class2 (Metric fine thread)
Sealant (Thread portion)		With sealant

Note1) Applicable for general industry water. Consult SMC if using for other kind of fluid.
Surge pressure must be under the max. operating pressure.

Component Materials

Body	C3604BD, PBT, PP
Stud	C3604BD (Thread portion)
Chuck	Stainless Steel (SUS304)
Guide	SUS304, C3604BD, POM
Collet	POM
Release button	POM
Packing, O ring	NBR
Gasket	SUS304, NBR

Model

Male connector
KQ2H P.2.2-18

Used to pipe in the same direction from female threaded portion.
Most common style.

Straight union
KQ2H P.2.2-18

Used to connect tubes in the same direction.

Male elbow
KQ2L P.2.2-18

Used to pipe in right angles to female threaded portion.
Most common style.

Union elbow
KQ2L P.2.2-18

Used to connect tubes at right angles.

Plug-in elbow
KQ2L P.2.2-19

Used to change by 90° in a tube fetching direction from One-touch fittings.

Reducer elbow
KQ2L P.2.2-19

Used to change by 90° in tube fetching direction from One-touch fittings and to size down.

Exteded male elbow
KQ2W P.2.2-19

For when the elbow extends over a standard elbow for easier of connnection/ disconnection of tubing.

Male branch tee
KQ2T P.2.2-19

Used to branch line from female thread in both 90°directions.

Union tee
KQ2T P.2.2-20

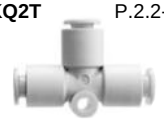

Used to connect tubes in both 90° directions.

Male run tee
KQ2Y P.2.2-20

Used for a branch line in the same direction from female thread and in 90° directions.

Plug-in reducer
KQ2R P.2.2-20

Used to change size of One-touch fittings.

Union "Y"
KQ2U P.2.2-20

Used to connect tubes in the same direction.

Plug-in "Y"
KQ2U P.2.2-21

Used to branch tubing in the same direction from One-touch fittings.

Branch "Y"
KQ2U P.2.2-21

Used to branch line in the same direction from female thread.

Bulkhead union
KQ2E P.2.2-21

Used for junction connection of two tubes for installation of a panel.

Bulkhead connector
KQ2E P.2.2-21

Used for transit connection of a tube and a male screw for installation of a panel.

How to Order

KQ2 H 05 – 02 S

One-touch fitting

Model

H	Male connector*
	Straight union
L	Male elbow*
	Union elbow
	Plug-in elbow
	Reducer elbow
W	Extended male elbow*
T	Male branch tee*
	Union tee
Y	Male run tee*
U	Union "Y"
	Plug-in "Y"*
	Branch "Y"
R	Plug-in reducer
E	Bulkhead union
	Bulkhead connector

With *mark: With sealant is available.

Applicable tube O.D.

01	1/8
05	3/16
07	1/4
09	5/16
11	3/8
13	1/2

Port size

M5	M5 X 0.8
01	1/8
02	1/4
03	3/8
04	1/2
00	Same dia. tube
99	Same dia. rod

Sealant

—	Without sealant
S	Sealant

Male connector: KQ2H

KQ2H01-M5
KQ2H07-M5

<KQ2H05-M5>

<R(PT)>

Tube O.D. (inch)	Thread M R(PT)	Part No.	H (Hex.)	øD (1)	L	A*	M	Min. hole dia.	Weight (g)
1/8	**M5 X 0.8**	**KQ2H01-M5**	7	—	16.7	13.6	12.7	2.5	2
	1/8	**KQ2H01-01S**	10	—	22	18	15.5		9
	1/4	**KQ2H01-02S**	14	—	19.5	13.5			16
3/16	**M5 X 0.8**	**KQ2H05-M5**	ø10.7	—	24	20.5	16.5	2.5	6
	1/8	**KQ2H05-01S**	11	—	22	18		3.5	11
	1/4	**KQ2H05-02S**	14	—	21	15			12
1/4	**M5 X 0.8**	**KQ2H07-M5**	11	10.3	18.4	15.3	13.6	2.5	3.3
	1/8	**KQ2H07-01S**	14	—	22.5	18.5	17	4.6	10
	1/4	**KQ2H07-02S**		—	23	17			15
	3/8	**KQ2H07-03S**	17	—	23	16.5			27
5/16	1/8	**KQ2H09-01S**	14	—	28	24	18.5	6	15
	1/4	**KQ2H09-02S**		—	26.5	20.5			16
	3/8	**KQ2H09-03S**	17	—	22.5	15.5			24
3/8	1/4	**KQ2H11-02S**	17	—	33.5	27.5	21	7	31
	3/8	**KQ2H11-03S**		—	29	22.5			29
	1/2	**KQ2H11-04S**	22	—	27	19			46
1/2	1/4	**KQ2H13-02S**	22	—	34.5	28.5	22	9	44
	3/8	**KQ2H13-03S**		—	33.5	27		9.6	
	1/2	**KQ2H13-04S**		—	30	22			

* Reference dimensions after R(PT) thread installation.
Note1) øD: max. diameter

KQ2H01-M5
<KQ2H07-M5>

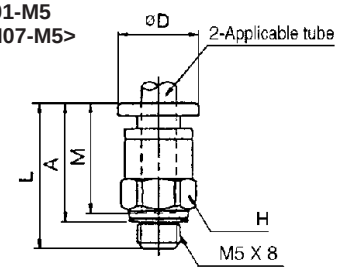

<KQ2H05-M5>

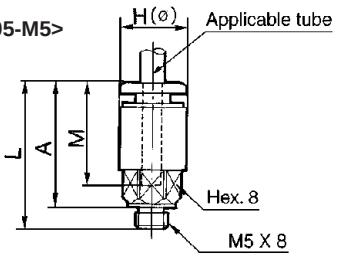

<R(PT)>

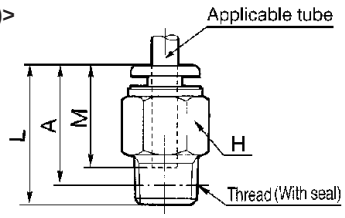

Straight union: KQ2H

Tube O.D. (inch)	Part No.	øD (1)	L	M	Min. hole dia.	Weight (g)
3/16	**KQ2H05-00**	11.4	34	16.5	3.5	4
1/4	**KQ2H07-00**	13.2	34.5	17	4.6	4
5/16	**KQ2H09-00**	15.2	38.5	18.5	6	6
3/8	**KQ2H11-00**	17.9	42.5	21	7	11
1/2	**KQ2H13-00**	21.7	44.5	22	9.6	16

Note1) øD: max. diameter

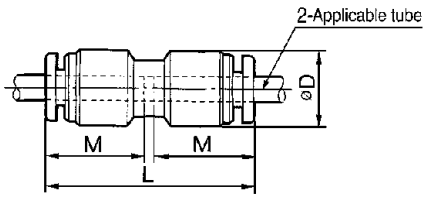

Male elbow: KQ2L

Tube O.D. (inch)	Thread M R(PT)	Part No.	H (Hex.)	øD1 (1)	øD2	L1	L2	A*	M	Min. hole dia.	Weight (g)
1/8	**M5 X 0.8**	**KQ2L01-M5**	7	8.4	—	15.3	13.2	14.3	12.7	2.3	2.5
3/16	1/8	**KQ2L05-01S**	10	11.4	10	19.5	22.5	24	16.5	3.5	10
	1/4	**KQ2L05-02S**	14				26.5	26			19
1/4	**M5 X 0.8**	**KQ2L07-M5**	7	12	—	16.1	15.1	18	13.6	2.3	3.2
	1/8	**KQ2L07-01S**	10	13.2	10	20.5	23.5	26	17	4.6	10
	1/4	**KQ2L07-02S**	14				27.5	28			20
	3/8	**KQ2L07-03S**	17				29.5	29.5			32
5/16	1/8	**KQ2L09-01S**	12	15.2	12	23.5	24.5	28	18.5	6	12
	1/4	**KQ2L09-02S**	14				28.5	30			20
	3/8	**KQ2L09-03S**	17				30.5	31.5			28
3/8	1/4	**KQ2L11-02S**	17	17.9	17	25.5	29.5	32.5	21	7	23
	3/8	**KQ2L11-03S**					31.5	34			33
	1/2	**KQ2L11-04S**	22				35.5	36.5			59
1/2	1/4	**KQ2L13-02S**	17	21.7	17	28	31.5	36.5	22	9	28
	3/8	**KQ2L13-03S**					33.5	38.5		9.6	36
	1/2	**KQ2L13-04S**	22				37.5	40			62

* Reference dimensions after R(PT) thread installation.
Note1) øD: max. diameter

<M5>

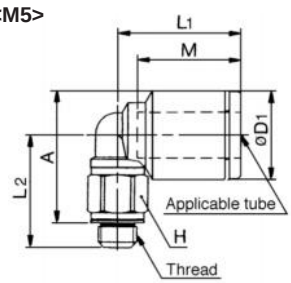

<P(PT)>

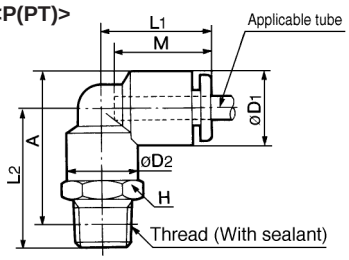

Union elbow: KQ2L

Tube O.D. (inch)	Part No.	øD (1)	L	Q	M	Min. hole dia.	Weight (g)
3/16	**KQ2L05-00**	11.4	19.5	4.8	16.5	3.5	5
1/4	**KQ2L07-00**	13.2	20.5	5.3	17	4.6	5
5/16	**KQ2L09-00**	15.2	23	6	18.5	6	7
3/8	**KQ2L11-00**	17.9	26	6.6	21	7	13
1/2	**KQ2L13-00**	21.7	29	7.8	22	9.6	18

Note1) øD: max. diameter

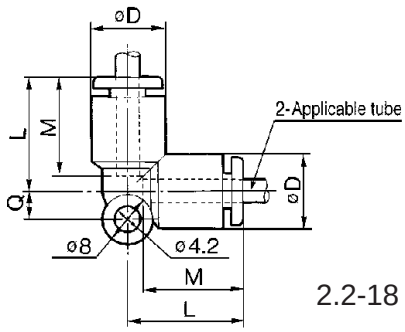

Plug-in elbow: KQ2L

Tube O.D. (inch)	Fitting size ød (inch)	Part No.	øD1 (1)	øD2	L1	L2	A	M	Min. hole dia.	Weight (g)
3/16	3/16	**KQ2L05-99**	11.4	10	19.5	34	23.5	16.5	3.5	7
1/4	1/4	**KQ2L07-99**	13.2	10	20	27.5	17.5	17	4.6	8
5/16	5/16	**KQ2L09-99**	15.2	12	22.5	31.5	21	18.5	6	6
3/8	3/8	**KQ2L11-99**	17.9	13.6	25	35	23	21	7	19
1/2	1/2	**KQ2L13-99**	21.7	17	28	44.5	34	22	9.6	27

Note1) øD1: max. diameter

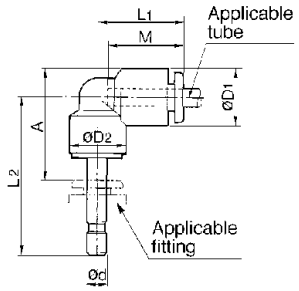

Reducer elbow: KQ2L

Tube O.D. (inch)	Fitting size ød (inch)	Part No.	øD1 (1)	øD2	L1	L2	A	M	Min. hole dia.	Weight (g)
3/16	1/4	**KQ2L05-07**	11.4	10	19.5	34.5	23.5	16.5	3.5	8
	5/16	**KQ2L05-09**				35.5	23			11
1/4	5/16	**KQ2L07-09**	13.2	10	20.5	36.5	24.5	17	4.6	12
	3/8	**KQ2L07-11**				37.5	23.5			17
5/16	3/8	**KQ2L09-11**	15.2	12	23.5	40.5	27.5	18.5	6	17
	1/2	**KQ2L09-13**				41.5				30
3/8	1/2	**KQ2L11-13**	17.9	17	25.5	43	30	21	7	25

Note1) øD1: max. diameter

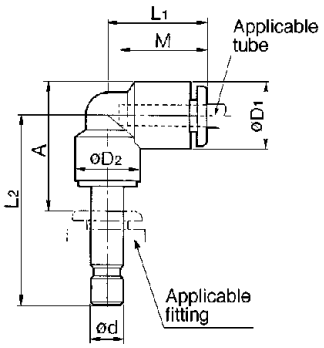

Extended male elbow: KQ2W

Tube O.D. (inch)	Thread R(PT)	Part No.	H (Hex.)	øD1 (1)	øD2	L1	L2	A*	M	Min. hole dia.	Weight (g)
3/16	1/8	**KQ2W05-01S**	10	11.4	10	19.5	38	40	16.5	3.5	19
	1/4	**KQ2W05-02S**	14				44	43.5			41
1/4	1/8	**KQ2W07-01S**	10	13.2	10	20.5	40.5	43	17	4.6	20
	1/4	**KQ2W07-02S**	14				46.5	47			45
	3/8	**KQ2W07-03S**	17				48.5	49			69
5/16	1/8	**KQ2W09-01S**	12	15.2	12	23.5	43.5	47	18.5	6	30
	1/4	**KQ2W09-02S**	14				49.5	51			47
	3/8	**KQ2W09-03S**	17				51.5	53			74
3/8	1/4	**KQ2W11-02S**	17	17.9	17	25.5	56	59	21	7	69
	3/8	**KQ2W11-03S**					58	61			76
	1/2	**KQ2W11-04S**	22				64.5	65.5			147
1/2	1/4	**KQ2W13-02S**	17	21.7	17	28	58	63	22	9	72
	3/8	**KQ2W13-03S**					60	64.5		9.6	78
	1/2	**KQ2W13-04S**	22				66.5	69			149

∗ Reference dimensions after R(PT) thread installation.
Note1) øD1: max. diameter

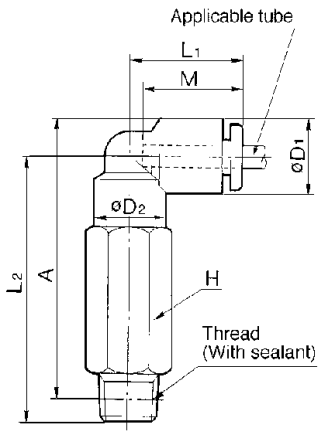

Male branch tee: KQ2T

Tube O.D. (inch)	Thread R(PT)	Part No.	H (Hex.)	øD1 (1)	øD2	L1	L2	A*	M	Min. hole dia.	Weight (g)
3/16	1/8	**KQ2T05-01S**	10	11.4	10	19.5	22.5	24	16.5	3.5	12
	1/4	**KQ2T05-02S**	14				26.5	26			21
1/4	1/8	**KQ2T07-01S**	10	13.2	10	20.5	23.5	26	17	4.6	11
	1/4	**KQ2T07-02S**	14				27.5	28			21
	3/8	**KQ2T07-03S**	17				29.5	30			34
5/16	1/8	**KQ2T09-01S**	12	15.2	12	23	24.5	28	18.5	6	15
	1/4	**KQ2T09-02S**	14				28.5	30			23
	3/8	**KQ2T09-03S**	17				30.5	31.5			35
3/8	1/4	**KQ2T11-02S**	17	17.9	17	25.5	29.5	32.5	21	7	29
	3/8	**KQ2T11-03S**					31.5	34.5			38
	1/2	**KQ2T11-04S**	22				35.5	36.5			64
1/2	1/4	**KQ2T13-02S**	17	21.7	17	28	31.5	36.5	22	9	34
	3/8	**KQ2T13-03S**					33.5	38.5		9.6	43
	1/2	**KQ2T13-04S**	22				37.5	40			69

∗ Reference dimensions after R(PT) thread installation.
Note1) øD1: max. diameter

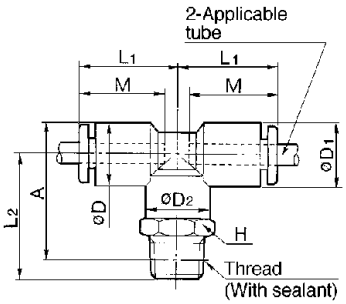

Union tee: KQ2T

Tube O.D. (inch)	Part No.	øD (1)	L	Q	M	Min. hole dia.	Weight (g)
3/16	**KQ2T05-00**	11.4	19.5	4.8	16.5	3.5	7
1/4	**KQ2T07-00**	13.2	20.5	5.3	17	4.6	8
5/16	**KQ2T09-00**	15.2	23	6	18.5	6	11
3/8	**KQ2T11-00**	17.9	26	6.6	21	7	18
1/2	**KQ2T13-00**	21.7	29	7.8	22	9.6	26

Note1) øD: max. diameter

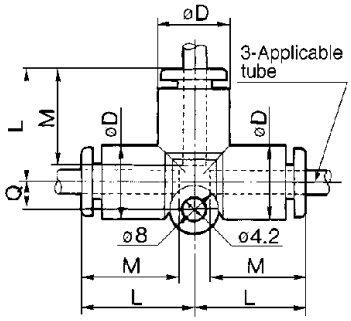

Male run tee: KQ2Y

Tube O.D. (inch)	Thread R(PT)	Part No.	H (Hex.)	øD1 (1)	øD2	L1	L2	A*	M	Min. hole dia.	Weight (g)
3/16	1/8	**KQ2Y05-01S**	10	11.4	10	19.5	22.5	24	16.5	3.5	12
	1/4	**KQ2Y05-02S**	14				26.5	26			21
1/4	1/8	**KQ2Y07-01S**	10	13.2	10	20.5	23.5	26	17	4.6	11
	1/4	**KQ2Y07-02S**	14				27.5	28			21
	3/8	**KQ2Y07-03S**	17				29.5	29.5			34
5/16	1/8	**KQ2Y09-01S**	12	15.2	12	23.5	24.5	28	18.5	6	15
	1/4	**KQ2Y09-02S**	14				28.5	30			23
	3/8	**KQ2Y09-03S**	17				30.5	31.5			35
3/8	1/4	**KQ2Y11-02S**	17	17.9	17	25.5	29.5	32.5	21	7	29
	3/8	**KQ2Y11-03S**					31.5	34			38
	1/2	**KQ2Y11-04S**	22				35.5	36.5			64
1/2	1/4	**KQ2Y13-02S**	17	21.7	17	28	31.5	36.5	22	9	34
	3/8	**KQ2Y13-03S**					33.5	38.5		9.5	43
	1/2	**KQ2Y13-04S**	22				37.5	40			69

∗ Reference dimensions after R(PT) thread installation.
Note1) øD1: max. diameter

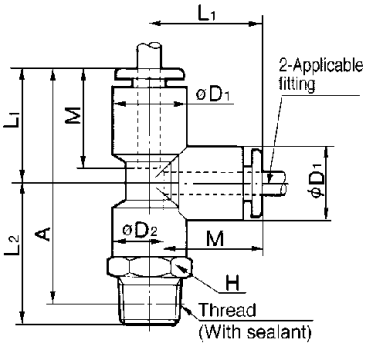

Plug-in reducer: KQ2R

Tube O.D. (inch)	Fitting size ød (inch)	Part No.	øD (1)	L1	A	M	Min. hole dia.	Weight (g)
3/16	1/4	**KQ2R05-07**	11.4	34.5	18.5	16.5	3.5	12
	5/16	**KQ2R05-09**	10.7	36.5	18			14
1/4	5/16	**KQ2R07-09**	12.5	37	18.5	17	4.6	17
	3/8	**KQ2R07-11**		40	19.5			19
5/16	3/8	**KQ2R09-11**	14	40	19	18.5	6	24
	1/2	**KQ2R09-13**		41				32
3/8	1/2	**KQ2R11-13**	17.9	44	22	21	7	32

Note1) øD: max. diameter

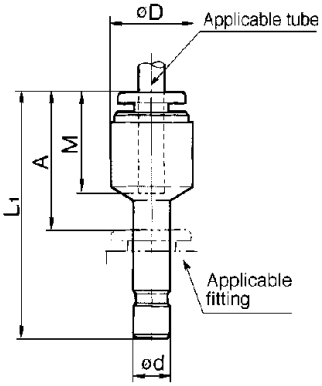

Union“Y”: KQ2U

Tube O.D. (inch)	Part No.	øD (1)	L1	L2	P	Q	M	Min. hole dia.	Weight (g)
3/16	**KQ2U05-00**	11.4	36.5	20.5	11.4	10.6	16.5	3.5	9
1/4	**KQ2U07-00**	13.2	38	21.5	13.2	12	17	4.6	9
5/16	**KQ2U09-00**	15.2	42.5	24.5	15.2	13.7	18.5	6	11

Note1) øD: max. diameter

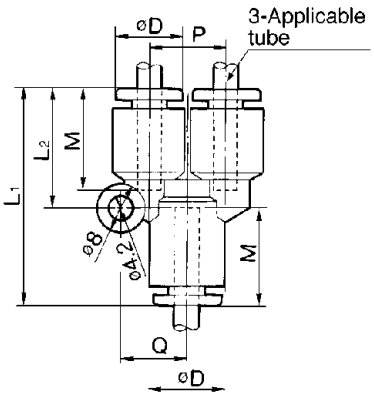

Plug-in "Y": KQ2U

Tube O.D. (inch)	Fitting size ød (inch)	Part No.	øD (1)	L1	L2	P	Q	A	M	Min. hole dia.	Weight (g)
3/16	3/16	**KQ2U05-99**	11.4	56	20.5	11.4	10.6	39.5	16.5	3.5	17
1/4	1/4	**KQ2U07-99**	13.2	56.5	21.5	13.2	12	39.5	17	4.6	18
5/16	5/16	**KQ2U09-99**	15.2	64.5	24.5	15.2	13.7	46	18.5	6	21

Note1) øD1: max. diameter

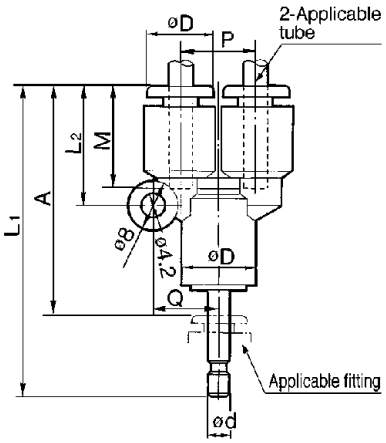

Branch "Y": KQ2U

Tube O.D. (inch)	Thread R(PT)	Part No.	H (Hex.)	øD (1)	L	P	A*	M	Min. hole dia.	Weight (g)
3/16	1/8	**KQ2U05-01S**	12	11.4	44	11.4	40	16.5	3.5	18
	1/4	**KQ2U05-02S**	14		48.5		42.5			18
1/4	1/8	**KQ2U07-01S**	14	13.2	46.5	13.2	42.5	17	4.6	19
	1/4	**KQ2U07-02S**			49.5					19
	3/8	**KQ2U07-03S**	17		51.5		45			19
5/16	1/8	**KQ2U09-01S**	17	15.2	52.5	15.2	48.5	18.5	6	21
	1/4	**KQ2U09-02S**			55.5		49.5			22
	3/8	**KQ2U09-03S**			56.5		50			35
3/8	1/4	**KQ2U11-02S**	19	17.9	60	17.9	54	21	7	42
	3/8	**KQ2U11-03S**			61		54.5			43
	1/2	**KQ2U11-04S**	22		64.5		56.5			56
1/2	1/4	**KQ2U13-02S**	22	21.7	64.5	21.7	58.5	22	9.5	31
	3/8	**KQ2U13-03S**			65.5		59			41
	1/2	**KQ2U13-04S**			68.5		60.5			68

* Reference dimensions after R(PT) thread installation.
Note1) øD1: max. diameter

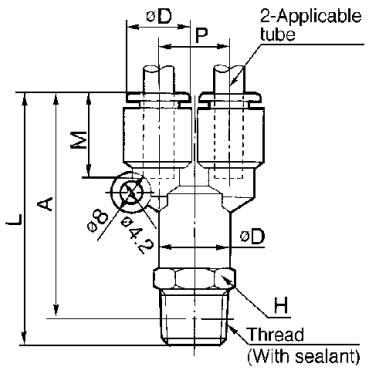

Bulkhead union: KQ2E

Tube O.D. (inch)	Part No.	T (M)	H (Hex.)	L	Mounting hole	M	Min. hole dia.	Weight (g)
3/16	**KQ2E05-00M**	M14 X 1	17	34	15	16.5	3.5	30
1/4	**KQ2E07-00M**	M14 X 1	17	34.5	15	17	4.6	30
5/16	**KQ2E09-00M**	M16 X 1	19	38	17	18.5	6	48
3/8	**KQ2E11-00M**	M20 X 1	24	42.5	21	21	7	62
1/2	**KQ2E13-00M**	M22 X 1	27	44.5	23	22	9.6	85

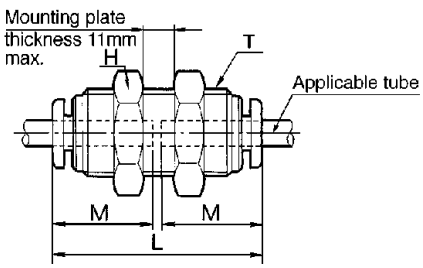

Bulkhead connector: KQ2E

Tube O.D. (inch)	Fitting size Rc(PT)	Part No.	T (M)	H1 (Hex.)	H2 (Hex.)	L1	L2	M	Min. hole dia.	Mounting hole	Weight (g)
3/16	1/8	**KQ2E05-01**	M14 X 1	17	17	28	11.5	16.5	3.5	15	30
1/4	1/4	**KQ2E07-02**	M14 X 1	17	17	32.5	14.5	17	4.6	15	31
5/16	3/8	**KQ2E09-03**	M16 X 1	19	19	35	15	18.5	6	17	36
3/8	3/8	**KQ2E11-03**	M20 X 1	22	24	35	14.5	21	7	21	64
1/2	3/8	**KQ2E13-03**	M22 X 1	24	27	37	14.5	22	9.6	23	78
	1/2	**KQ2E13-04**	M22 X 1			41.5	18.5				74

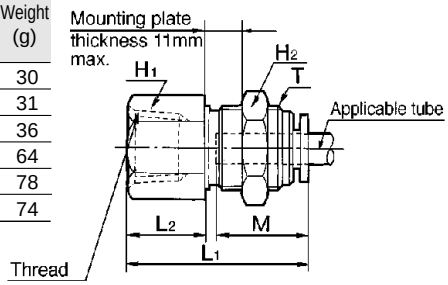

UNI ONE TOUCH FITTINGS

FITTINGS WITH UNI-THREAD
SERIES KQ: BLACK BODY FITTINGS
SERIES KQ2: WHITE BODY FITTINGS

SERIES KQ2 ONE TOUCH FITTINGS

- Wide Range of Pressures low vacuum to 0.1MPa
- Wide Range of Applicable Tube Systems (4mm to 16mm)
- Minimized Resistance to Air Flow
- Easy and quick installation of tube
- A unique thread concept allows for compatability with parallel and taper female threads. Uni-thread fits all female thread types* (Rc, Rp, G, NPT, NPTF, BSP, BSPT)
- No Thread Sealant required
- Space-Saving
- Uniform Mounting Height improves appearance
- Cuts assembly time by over 60%

SERIES KQ: BLACK BODY FITTINGS
AVAILABLE IN CANADA
SERIES KQ2: WHITE BODY FITTINGS
AVAILABLE IN THE USA

✔ Constant mounting height saves space

Lower height of screwed-in fittings save space and improves appearance

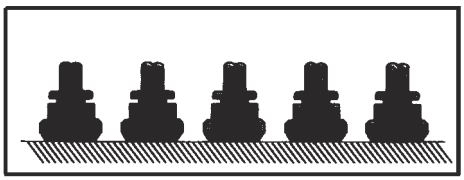

Uni-Threads

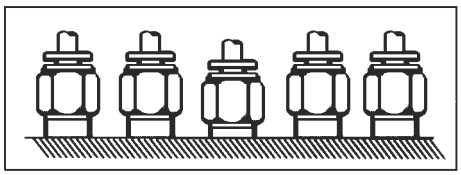

Conventional Threads

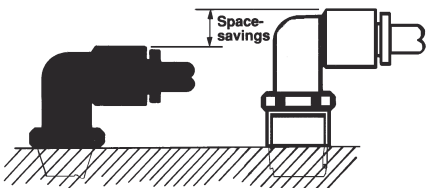

✔ Screw-In Time is reduced to ⅓

Existing Tapered Thread Series: 2 to 3 turns with a wrench after manual tightening

Uni-Thread Series: 1/24 to ⅙ turn with a wrench after manual tightening

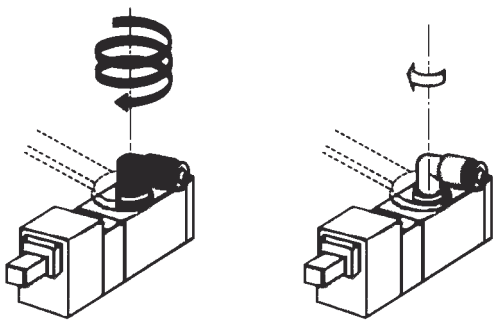

Thread Type	Manual Tightening Time +Tool Tightening Time	Total	Ratio
Uni-Thread	6 sec + 4 sec	10 sec	1/3
Conventional Thread	4 sec + 26 sec	30 sec	1

UNITHREAD CONSTRUCTION

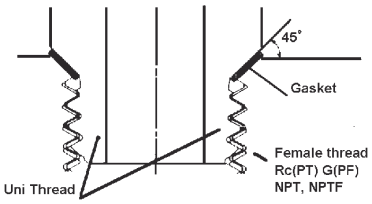

UNI THREAD RIDGE SHAPE

A new ridge shape has been created as a Uni-Thread for common application to Rc(PT), G(PF) NPT, and NPTF female threads with different thread diameters, pitches, tapered angles, ridge shapes, etc..

GASKET CONSTRUCTION

A gasket made of stainless sheet covered with laminated NBR on both sides is seated on the chamfer of a female thread to materialize a perfect sealing construction irrespective of the difference in thread diameters due to the difference in the types of female threads, variation in tolerance, difference in the size of chamfer.

(It is applicable to any female thread with ordinary chamfer.)

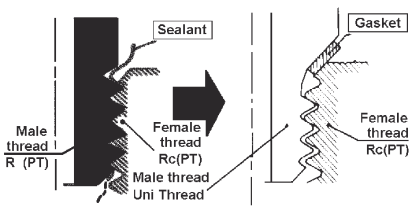

PARTS DESCRIPTION

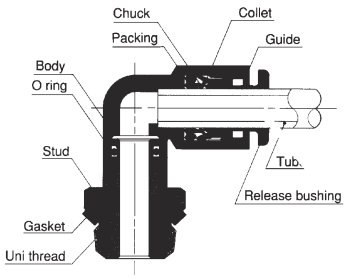

TECHNICAL SPECIFICATIONS

Fluid	Air
Max Operating Pressure	0.1MPa / 145PSI
Operating Vacuum Pressure	0.001MPa (Absolute) 0.2PSI
Applicable Tube Material	Nylon,Soft Nylon,Polyurethane
Proof Pressure	3MPa / 435PSI
Ambient Fluid Temperature	0 - 60°C / 32 ~ 140°F

SEE INSIDE FRONT COVER FOR DETAILS OF YOUR LOCAL SALES OFFICE

FOR FURTHER TECHNICAL DETAILS ON THIS PRODUCT, REQUEST CATALOG REFERENCE E505 & N500

SERIES KQ: BLACK BODY FITTINGS AVAILABLE IN CANADA
SERIES KQ2: WHITE BODY FITTINGS AVAILABLE IN THE USA

PRODUCT SELECTOR

MALE CONNECTOR : KQH (KQ2H)

Use to pipe in the same direction from female threaded portion. Most general type.

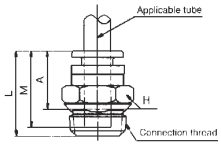

Applicable Tube OD (mm)	Connection Thread	Model	H (width Across Flats)	L	A	M	Effective Orifice (mm²) Nylon
4	⅛	KQH04-U01	10	18.5	14.5	16	5.6
4	¼	KQH04-U02	14	18	12	16	5.6
6	⅛	KQH06-U01	12	19.5	15.5	17	13.1
6	¼	KQH06-U02	14	19.5	13	17	13.1
6	⅜	KQH06-U03	17	18.5	12.5	17	13.1
8	⅛	KQH08-U01	14	25	21	18.5	26.1
8	¼	KQH08-U02	14	21.5	15.5	18.5	26.1
8	⅜	KQH08-U03	17	21	15	18.5	26.1
10	⅛	KQH10-U01	17	28	23	21	41.5
10	¼	KQH10-U02	17	28	22	21	41.5
10	⅜	KQH10-U03	17	24	18	21	41.5
10	½	KQH10-U04	22	22	14	21	41.5
12	¼	KQH12-U02	19	30.5	24.5	22	58.3
12	⅜	KQH12-U03	19	25.5	19.5	22	58.3
12	½	KQH12-U04	22	24.5	16.5	22	58.3
16	⅜	KQH16-U03	24	33.5	27.5	24	81
16	½	KQH16-U04	24	28.5	20.5	24	113

Applicable Tube OD (Inch)	Connection Thread Uni Thread	Model	H (width Across Flats)	L	A	M	Minimum Hole Diameter
1/8	1/8	KQH01-U01	11.11	19	15	15.5	2.5
1/8	1/4	KQH01-U02	14.29	17.5	11.5	15.5	2.5
5/32	1/8	KQH03-U01	11.11	19.5	15.5	16	3
5/32	1/4	KQH03-U02	14.29	19	13	16	3
3/16	1/8	KQH05-U01	12.7	19	15	16	3.5
3/16	1/4	KQH05-U02	14.29	17.5	11.5	16	3.5
1/4	1/8	KQH07-U01	14.29	22.5	18.5	17	4.6
1/4	1/4	KQH07-U02	14.29	20.5	14.5	17	4.6
1/4	3/8	KQH07-U03	17.46	18.5	12.5	17	4.6
5/16	1/8	KQH09-U01	14.29	25.5	21.5	18.5	6
5/16	1/4	KQH09-U02	14.29	21.5	15.5	18.5	6
5/16	3/8	KQH09-U03	17.46	21	15	18.5	6
3/8	1/4	KQH11-U02	17.46	28	22	21	7
3/8	3/8	KQH11-U03	17.46	28	22	21	7
3/8	1/2	KQH11-U04	22.23	22	14	21	7
1/2	1/4	KQH13-U02	22.23	30	24	22	33
1/2	3/8	KQH13-U03	22.23	28.5	22.5	22	30
1/2	1/2	KQH13-U04	22.23	25	17	22	28

PRODUCT SELECTOR

MALE ELBOW : KQL (KQ2L)

Use to pipe in right angle to female threaded portion. Most general type.

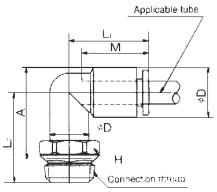

Applicable Tube OD mm	Connection Thread	Model	H	øD1	øD2	L1	L2	A	M	Effective Orifice (mm²) Nylon
4	⅛	KQL04-U01	10	10.4	10	18	20	21.5	16	4.2
4	¼	KQL04-U02	14	10.4	10	18	22	21.5	16	4.2
6	⅛	KQL06-U01	10	12.8	10	20	21.5	23.5	17	11.4
6	¼	KQL06-U02	14	12.8	10	20	23	23.5	17	11.4
6	⅜	KQL06-U03	17	12.8	10	20	24	23.5	17	11.4
8	⅛	KQL08-U01	12	15.2	12	23	22.5	26	18.5	21.6
8	¼	KQL08-U02	14	15.2	12	23	24.5	26	18.5	21.6
8	⅜	KQL08-U03	17	15.2	12	23	25.5	27	18.5	21.6
10	⅛	KQL10-U01	17	18.5	17	26.5	25	29.5	21	21.6
10	¼	KQL10-U02	17	18.5	17	26.5	26.5	30	21	35.2
10	⅜	KQL10-U03	17	18.5	17	26.5	27	30.5	21	35.2
10	½	KQL10-U04	22	18.5	17	26.5	30	31.5	21	35.2
12	¼	KQL12-U02	17	20.9	17	28.5	27	31.5	22	50.2
12	⅜	KQL12-U03	17	20.9	17	28.5	28	32.5	22	50.2
12	½	KQL12-U04	22	20.9	17	28.5	31	33.5	22	50.2
16	⅜	KQL16-U03	22	26.5	21	33	40.5	33	24	71
16	½	KQL16-U04	22	26.5	21	33	40.5	35	24	100

H: Width Across Flats

Applicable Tube OD Inch	Connection Thread	Model	H	øD1	øD2	L1	L2	A	M	Minimum Hole Diameter
1/8	1/8	KQL01-U01	11.11	9.6	10	17.5	20	21	15.5	2.5
1/8	1/4	KQL01-U02	14.29	9.6	10	17.5	22	21	15.5	2.5
5/32	1/8	KQL03-U01	11.11	10.4	10	18	20	21.5	16	3
5/32	1/4	KQL03-U02	14.29	10.4	10	18	22.5	21.5	16	3
3/16	1/8	KQL05-U01	11.11	11.4	10	19.5	20.5	22.5	16	3.5
3/16	1/4	KQL05-U02	14.29	11.4	10	19.5	20.5	22.5	16	3.5
1/4	1/8	KQL07-U01	11.11	13.2	10	20.5	21.5	24	17	4.6
1/4	1/4	KQL07-U02	14.29	13.2	10	20.5	23.5	24.5	17	4.6
1/4	3/8	KQL07-U03	17.46	13.2	10	20.5	24.5	25	17	4.6
5/16	1/8	KQL09-U01	14.29	15.2	12	23.5	22.5	26	18.5	6
5/16	1/4	KQL09-U02	14.29	15.2	12	23.5	24.5	26.5	18.5	6
5/16	3/8	KQL09-U03	17.46	15.2	12	23.5	25.5	27	18.5	6
3/8	1/4	KQL11-U02	17.46	17.9	17	25.5	26.5	29.5	21	7
3/8	3/8	KQL11-U03	17.46	17.9	17	25.5	27	30	21	7
3/8	1/2	KQL11-U04	17.46	17.9	17	25.5	30	31	21	7
1/2	1/4	KQL13-U02	17.46	21.7	17	28	28.5	33	22	9
1/2	3/8	KQL13-U04	17.46	21.7	17	28	28.5	33.5	22	9.6
1/2	1/2	KQL13-U04	22.23	21.7	17	28	32	35	22	9.6

H: Width Across Flats

PRODUCT SELECTOR

BRANCH TEE : KQT (KQ2T)

Use to branch line from female thread of both side 90° direction.

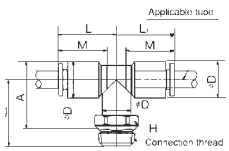

MORE SELECTIONS SEE NEXT PAGE ☞

Applicable Tube OD mm	Connection Thread	Model	H	øD1	øD2	L1	L2	A	M	Effective Orifice (mm²) Nylon
4	⅛	KQT04-U01	10	10.4	10	18	20	21.5	16	6.0
4	¼	KQT04-U02	14	10.4	10	18	22	21.5	16	6.0
6	⅛	KQT06-U01	10	12.8	10	20	21.5	23.5	17	13.9
6	¼	KQT06-U02	14	12.8	10	20	23	23.5	17	13.9
6	⅜	KQT06-U03	17	12.8	10	20	24	24.5	17	13.9
8	⅛	KQT08-U01	12	15.2	12	23	22.5	26	18.5	26.3
8	¼	KQT08-U02	14	15.2	12	23	24.5	26	18.5	26.3
8	⅜	KQT08-U03	17	15.2	12	23	25.5	27	18.5	26.3
10	⅛	KQT10-U01	17	18.5	17	26.5	25	29.5	21	40.8
10	¼	KQT10-U02	17	18.5	17	26.5	26.5	30	21	40.8
10	⅜	KQT10-U03	17	18.5	17	26.5	27	30.5	21	40.8
10	½	KQT10-U04	22	18.5	17	26.5	30	31.5	21	40.8
12	¼	KQT12-U02	17	20.9	17	28.5	27	31.5	22	57.2
12	⅜	KQT12-U03	17	20.9	17	28.5	28	32.5	22	57.2
12	½	KQT12-U04	22	20.9	17	28.5	31	33.5	22	57.2
16	⅜	KQT16-U03	22	26.5	21	33	40.5	33	24	71
16	½	KQT16-U04	22	26.5	21	33	40.5	35	24	100

H: Width Across Flats

Applicable Tube OD Imch	Connection Thread	Model	H	øD1	øD2	L1	L2	A	M	Minimum Hole Diameter
1/8	1/8	KQT01-U01	11.11	9.6	10	17.5	20	21	15.5	2.5
1/8	1/4	KQT01-U02	14.29	9.6	10	17.5	22	21	15.5	2.5
5/32	1/8	KQT03-U01	11.11	10.4	10	18	20	21.5	16	3
5/32	1/4	KQT03-U02	14.29	10.4	10	18	22.5	21.5	16	3
3/16	1/8	KQT05-U01	11.11	11.4	10	19.5	20.5	22.5	16.5	3.5
3/16	1/4	KQT05-U02	14.29	11.4	10	19.5	23	22.5	16.5	3.5
1/4	1/8	KQT07-U01	11.11	13.2	10	20.5	21.5	24	17	4.6
1/4	1/4	KQT07-U02	14.29	13.2	10	20.5	23.5	24.5	17	4.6
1/4	3/8	KQT17-U03	17.46	13.2	10	20.5	24.5	25	17	4.6
5/16	1/8	KQT09-U01	12.7	15.2	12	23.5	22.5	26	18.5	6
5/16	1/4	KQT09-U02	14.29	15.2	12	23.5	24.5	26.5	18.5	6
5/16	3/8	KQT09-U03	17.46	15.2	12	23.5	25.5	27	18.5	6
3/8	1/4	KQT11-U01	17.46	17.9	17	25.5	26.5	29.5	21	7
3/8	3/8	KQT11-U02	17.46	17.9	17	25.5	27	30	21	7
3/8	1/2	KQT11-U03	17.46	17.9	17	25.5	30	31	21	7
1/2	1/4	KQT13-U02	17.46	21.7	17	28	28.5	33	22	9
1/2	3/8	KQT13-U03	17.46	21.7	17	28	28.5	33.5	22	9.6
1/2	1/2	KQT13-U04	22.23	21.7	17	28	32	35	22	9.6

H: Width Across Flats

FOR FURTHER TECHNICAL DETAILS ON THIS PRODUCT, REQUEST CATALOG REFERENCE **E505 & N500**

UNI ONE TOUCH FITTINGS

SERIES KQ: BLACK BODY FITTINGS AVAILABLE IN CANADA
SERIES KQ2: WHITE BODY FITTINGS AVAILABLE IN THE USA

PRODUCT SELECTOR

MALE RUN TEE : KQY (KQ2Y)

Use to branch line in the same direction from female thread and in 90° direction.

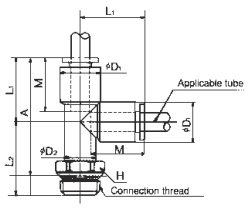

Applicable Tube OD mm	Connection Thread Uni thread	Model	H (Width Across Flats)	øD1	øD2	L1	L2	A	M	Effective Orifice (mm² Nylon
4	⅛	KQY04-U01	10	10.4	10	18	20	34	16	6.4
4	¼	KQY04-U02	14	10.4	10	18	22	34.5	16	6.4
6	⅛	KQY06-U01	10	12.8	10	20	21.5	37.5	17	13.4
6	¼	KQY06-U02	14	12.8	10	20	23	37	17	13.4
6	⅜	KQY06-U03	17	12.8	10	20	24	38	17	13.4
8	⅛	KQY08-U01	12	15.2	12	23	22.5	41.5	18.5	25.6
8	¼	KQY08-U02	14	15.2	12	23	24.5	41.5	18.5	25.6
8	⅜	KQY08-U03	17	15.2	12	23	25.5	42.5	18.5	25.6
10	⅛	KQY10-U01	17	18.5	17	26.5	25	46.5	21	40
10	¼	KQY10-U02	17	18.5	17	26.5	26.5	47.5	21	40
10	⅜	KQY10-U03	17	18.5	17	26.5	27	48	21	40
10	½	KQY10-U04	22	18.5	17	26.5	30	49	21	40
12	¼	KQY12-U02	17	20.9	17	28.5	27	49.5	22	57.4
12	⅜	KQY12-U03	17	20.9	17	28.5	28	50.5	22	57.4
12	½	KQY12-U04	22	20.9	17	28.5	31	51.5	22	57.4
16	⅜	KQY16-U03	22	26.5	21	33	40.5	66	24	81
16	½	KQY16-U04	22	26.5	21	33	40.5	63	24	113

Applicable Tube OD Inch	Connection Thread Uni thread	Model	H (Width Across Flats)	øD1	øD2	L1	L2	A	M	Minimum Hole Diameter
1/8	1/8	KQY01-U01	11.11	9.6	10	17.5	20	33.5	15.5	2.5
1/8	1/4	KQY01-U02	14.29	9.6	10	17.5	22	33.5	15.5	2.5
5/32	1/8	KQY03-U01	11.11	10.4	10	18	20	34	16	3
5/32	1/4	KQY03-U02	14.29	10.4	10	18	22.5	34.5	16	3
3/16	1/8	KQY05-U01	11.11	11.4	10	19.5	20.5	36	16.5	3.5
3/16	1/4	KQY05-U02	14.29	11.4	10	19.5	23	36.5	16.5	3.5
1/4	1/8	KQY07-U01	11.11	13.2	10	20.5	21.5	38	17	4.6
1/4	1/4	KQY07-U02	14.29	13.2	10	20.5	23.5	37.5	17	4.6
1/4	3/8	KQY07-U03	17.46	13.2	10	20.5	24.5	39	17	4.6
5/16	1/8	KQY09-U01	12.7	15.2	12	23.5	22.5	42	18.5	6
5/16	1/4	KQY09-U02	14.29	15.2	12	23.5	24.5	42	18.5	6
5/16	3/8	KQY09-U03	17.46	15.2	12	23.5	25.5	43	18.5	6
3/8	1/4	KQY11-U02	17.46	17.9	17	25.5	26.5	46	21	7
3/8	3/8	KQY11-U03	17.46	17.9	17	25.5	27	46.5	21	7
3/8	1/2	KQY11-U04	22.23	17.9	17	25.5	30	47.5	21	7
1/2	1/4	KQY13-U02	17.46	21.7	17	28	28.5	50.5	22	9
1/2	3/8	KQY13-U03	17.46	21.7	17	28	28.5	50.5	22	9.6
1/2	1/2	KQY13-U04	22.23	21.7	17	28	32	52	22	9.6

PRODUCT SELECTOR

BRANCH "Y" : KQU (KQ2U)

Use to branch line in the same direction from female thread.

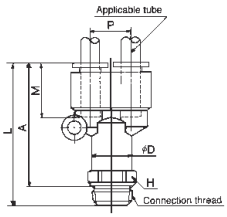

Applicable Tube OD mm	Connection Thread Uni Thread	Model	H (Width Across Flats)	øD	L	P	A	M	Effective Orifice (mm²) Nylon
4	⅛	KQU04-U01	11	10.4	40	10.4	36	16	4.2
4	¼	KQU04-U02	14	10.4	42	10.4	36	16	4.2
6	⅛	KQU06-U01	13	12.8	43.5	12.8	39.5	17	13.4
6	¼	KQU06-U02	14	12.8	45	12.8	39	17	13.4
6	⅜	KQU06-U03	17	12.8	46	12.8	40	17	13.4
8	⅛	KQU08-U01	17	15.2	50.5	15.2	46.5	18.5	25.6
8	¼	KQU08-U02	17	15.2	52	15.2	46	18.5	25.6
8	⅜	KQU08-U03	17	15.2	51.5	15.2	45.5	18.5	25.6
10	¼	KQU10-U02	19	18.5	57.5	18.5	51.5	21	40
10	⅜	KQU10-U03	19	18.5	57.5	18.5	51.5	21	40
10	½	KQU10-U04	22	18.5	59	18.5	51	21	40
12	¼	KQU12-U02	22	20.9	61	20.9	55	22	57.4
12	⅜	KQU12-U03	22	20.9	61	20.9	55	22	57.4
12	½	KQU12-U04	22	20.9	62.5	20.9	54.5	22	57.4

Applicable Tube OD Inch	Connection Thread Uni Thread	Model	H (Width Across Flats)	øD	L	P	A	M	Minimum Hole Diameter
1/8	1/8	KQU01-U01	12.7	9.6	38.5	9.6	34.5	15.5	2.5
1/8	1/4	KQU01-U02	14.29	9.6	40.5	9.6	34.5	15.5	2.5
5/32	1/8	KQU03-U01	12.7	10.4	40	10.4	36	16	3
5/32	1/4	KQU03-U02	14.29	10.4	42	10.4	36	16	3
3/16	1/8	KQU05-U01	12.7	11.4	42	11.4	38	16.5	3.5
3/16	1/4	KQU05-U02	14.29	11.4	44.5	11.4	39	16.5	3.5
1/4	1/8	KQU07-U01	14.29	13.2	44.5	13.2	40.5	17	4.6
1/4	1/4	KQU07-U02	14.29	13.2	46	13.2	40	17	4.6
1/4	3/8	KQU07-U03	17.46	13.2	46.5	13.2	40.5	17	4.6
5/16	1/8	KQU09-U03	17.46	15.2	50.5	15.2	46.5	18.5	6
5/16	1/4	KQU09-U04	17.46	15.2	52	15.2	46	18.5	6
5/16	3/8	KQU09-U02	17.46	15.2	51.5	15.2	45.5	18.5	6
3/8	1/4	KQU11-U02	19.05	17.9	56.5	17.9	50.5	21	7
3/8	3/8	KQU11-U03	19.05	17.9	56.5	17.9	50.5	21	7
3/8	1/2	KQU11-U04	22.23	17.9	59	17.9	51	21	7
1/2	1/4	KQU13-U02	22.23	21.7	61	21.7	55	22	9.6
1/2	3/8	KQU13-U03	22.23	21.7	61	21.7	55	22	9.6
1/2	1/2	KQU13-U04	22.23	21.7	62.7	21.7	54.7	22	9.6

PRODUCT SELECTOR

EXTENDED MALE ELBOW : KQW (KQ2W)

Basically use in the same way as elbow union.
Point of difference is that it is used to prevent interference of joints for stereopiping.

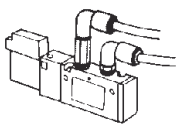

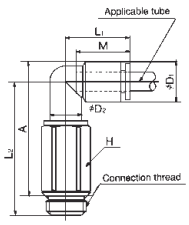

Applicable Tube OD mm	Connection Thread Uni Thread	Model	H (Width Across Flats)	øD1	øD2	L1	L2	A	M	Effective Orifice (mm²) Nylon
4	⅛	KQW04-U01	10	10.4	10	18	34.5	35.5	16	4
4	¼	KQW04-U02	14	10.4	10	18	37	38.5	16	4
6	⅛	KQW06-U01	10	12.8	10	20	38.5	41	17	10.9
6	¼	KQW06-U02	14	12.8	10	20	40.5	41	17	10.9
6	⅜	KQW06-U03	17	12.8	10	20	41.5	42	17	10.9
8	⅛	KQW08-U01	12	15.2	12	23	43.5	47.5	18	20.5
8	¼	KQW08-U02	14	15.2	12	23	45.5	47	18	20.5
8	⅜	KQW08-U03	17	15.2	12	23	46.5	48	18	20.5
10	¼	KQW10-U02	17	18.5	17	26.5	52.5	56	21	33.5
10	⅜	KQW10-U03	17	18.5	17	26.5	52.5	56	21	33.5
10	½	KQW10-U04	22	18.5	17	26.5	54.5	56	21	33.5
12	¼	KQW12-U02	17	20.9	17	28.5	54	58.5	22	47.7
12	⅜	KQW12-U03	17	20.9	17	28.5	54	58.5	22	47.7
12	½	KQW12-U04	22	20.9	17	28.5	56	58.5	22	47.7

Applicable Tube OD Inch	Connection Thread Uni Thread	Model	H (Width Across Flats)	øD1	øD2	L1	L2	A	M	Minimum Hole Diameter
1/8	1/8	KQW01-U01	11.11	9.6	10	17.5	35	35.5	15.5	2.5
1/8	1/4	KQW01-U02	14.29	9.6	10	17.5	36	35	15.5	2.5
5/32	1/8	KQW03-U01	11.11	10.4	10	18	35.5	36.5	16	3
5/32	1/4	KQW03-U02	14.29	10.4	10	18	41.5	41	16	3
3/16	1/8	KQW05-U01	11.11	11.4	10	19.5	36	37.5	16.5	3.5
3/16	1/4	KQW05-U02	14.29	11.4	10	19.5	40	40	16.5	3.5
1/4	1/8	KQW07-U01	11.11	13.2	10	20.5	39	41.5	17	4.6
1/4	1/4	KQW07-U02	14.29	13.2	10	20.5	41	41.5	17	4.6
1/4	3/8	KQW07-U03	17.46	13.2	10	20.5	42	42.5	17	4.6
5/16	1/8	KQW09-U01	12.7	15.2	12	23.5	40	43.5	18.5	6
5/16	1/4	KQW09-U02	14.29	15.2	12	23.5	45	47	18.5	6
5/16	3/8	KQW09-U03	17.46	15.2	12	23.5	45.5	47	18.5	6
3/8	1/4	KQW11-U02	17.46	17.9	17	25.5	51	54	21	7
3/8	3/8	KQW11-U03	17.46	17.9	17	25.5	51.5	54.5	21	7
3/8	1/2	KQW11-U04	22.23	17.9	17	25.5	55.5	56.5	21	7
1/2	1/4	KQW13-U02	17.46	21.7	17	28	53	58	22	9
1/2	3/8	KQW13-U03	17.46	21.7	17	28	53.5	58.5	22	9.6
1/2	1/2	KQW13-U04	22.23	21.7	17	28	57.5	60.5	22	9.6

SEE INSIDE FRONT COVER FOR DETAILS OF YOUR LOCAL SALES OFFICE

FOR FURTHER TECHNICAL DETAILS ON THIS PRODUCT, REQUEST CATALOG REFERENCE E505 & N500

PRODUCT SELECTOR

HEXAGON SOCKET HEAD MALE CONNECTOR : KQS (KQ2S)

Male connector for narrow space to tighten hexagon socket head in body by hexagon wrench.

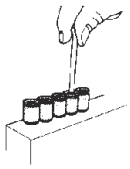

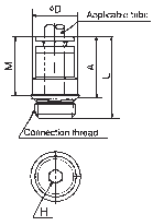

Applicable Tube OD mm	Connection Thread Uni Thread	Model	H (Width Across Flats)	øD	L	A	M	Effective Orifice (mm²) Nylon
4	⅛	KQS04-U01	3	10	23	18	16	4.1/3.6
6	⅛	KQS06-U01	4	11.8	24	19	17	10/9.9
6	¼	KQS06-U02	4	13.5	25	18.5	17	10.7/10
8	⅛	KQS08-U01	5	14	29	22	18.5	17.2/16.2
8	¼	KQS08-U02	6	14	28	21.5	18.5	23.3/16.2
8	⅜	KQS08-U03	6	17	26.5	20	18.5	23.3/16.2
10	⅛	KQS10-U01	5	17	31.5	24.5	21	17.2/10
10	¼	KQS10-U02	8	17	28.5	22	21	39/26.6
10	⅜	KQS10-U03	8	17	26.5	20	21	39/26.6
10	½	KQS10-U04	8	21	27	19	21	39/26.6
12	¼	KQS12-U02	8	19	35	25.5	22	46/44.5
12	⅜	KQS12-U03	9	19	28	19	22	60/44.5
12	½	KQS12-U04	9	21	27	19	22	60/44.5

PRODUCT SELECTOR

45° MALE ELBOW : KQK (KQ2K)

Use to tubing toward 45° from the thread part.
Intermediate type between the male connector and the male elbow.

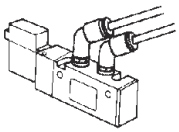

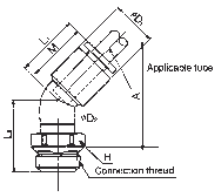

Applicable Tube OD mm	Connection Thread Uni Thread	Model	H (Width Across Flats)	øD1	øD2	L1	L2	A	M	Effective Orifice (mm²) Nylon
4	⅛	KQK04-U01	10	10.4	10	17	18.5	30	16	3.4
4	¼	KQK04-U02	14	10.4	10	17	20.5	30.5	16	3.4
6	⅛	KQK06-U01	10	12.8	10	18	18.5	31	17	8.7
6	¼	KQK06-U02	14	12.8	10	18	20.5	31	17	8.7
6	⅜	KQK06-U03	17	12.8	10	18	21.5	32	17	8.7
8	⅛	KQK08-U01	12	15.2	12	20.5	20	35	18.5	19.7
8	¼	KQK08-U02	14	15.2	12	20.5	22	35	18.5	19.7
8	⅜	KQK08-U03	17	15.2	12	20.5	23	36	18.5	19.7
10	⅛	KQK10-U01	17	18.5	17	24	22	38	21	30.9
10	¼	KQK10-U02	17	18.5	17	24	23.5	40.5	21	30.9
10	⅜	KQK10-U03	17	18.5	17	24	24	41	21	30.9
10	½	KQK10-U04	22	18.5	17	24	27	42	21	30.9
12	¼	KQK12-U02	17	20.9	17	25	24	42	22	44.5
12	⅜	KQK12-U03	17	20.9	17	25	24.5	42.5	22	44.5
12	½	KQK12-U04	22	20.9	17	25	27.5	43.5	22	44.5

PRODUCT SELECTOR

UNIVERSAL MALE ELBOW : KQV (KQ2V)

Elbow union for a narrow space to clamp the hexagon head of body with box wrench.

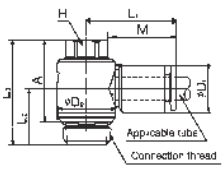

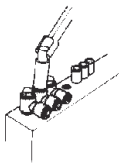

Applicable Tube OD mm	Connection Thread Uni Thread	Model	H (Width Across Flats)	øD1	øD2	L1	L2	L3	A	M	Effective Orifice (mm²) Nylon
4	⅛	KQV04-U01	8	10.4	13.4	22	13.5	25.5	21.5	16	2.9
6	⅛	KQV06-U01	8	12.8	13.4	24	13.5	25.5	21.5	17	7.5
6	¼	KQV06-U02	10	12.8	15.4	23.5	15.5	28	22	17	7.5
8	⅛	KQV08-U01	12	15.2	17.6	28.5	14.5	27.5	23.5	18.5	11.2
8	¼	KQV08-U02	12	15.2	17.6	28.5	16.5	29.5	23.5	18.5	11.2
8	⅜	KQV08-U03	14	15.2	20.6	27.5	18.5	34	28	18.5	14.3
10	¼	KQV10-U02	14	18.5	20.6	31	18.5	34	28	21	27
10	⅜	KQV10-U03	14	18.5	20.6	31	18.5	34	28	21	27
12	⅜	KQV12-U03	17	20.9	25.2	34	20	36.5	30.5	22	39
12	½	KQV12-U04	17	20.9	25.2	34	22.5	39.5	31.5	22	39

SERIES KQ: BLACK BODY FITTINGS
AVAILABLE IN CANADA
SERIES KQ2: WHITE BODY FITTINGS
AVAILABLE IN THE USA

FOR FURTHER TECHNICAL DETAILS ON THIS PRODUCT, REQUEST CATALOG REFERENCE
E501, E505 & N500