MACRON 14 ACTUATOR
MSA-14S-E-BC-A3-XXXX

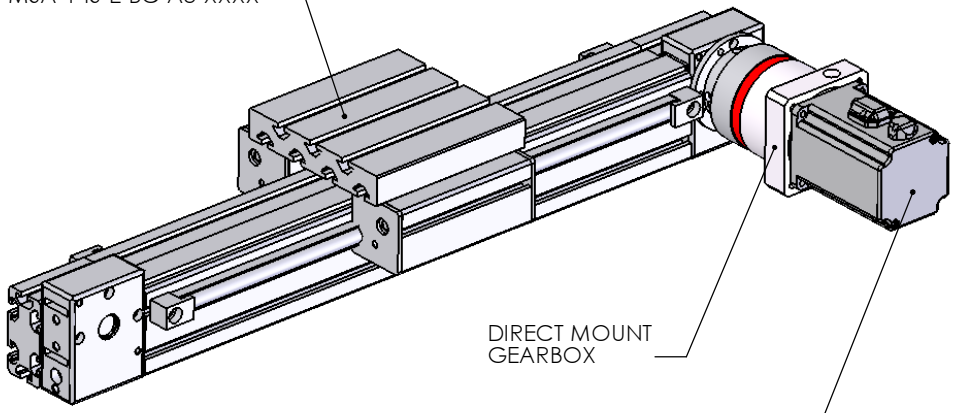

DIRECT MOUNT
GEARBOX

400W LENZE SERVO
MAS07C30-CB0

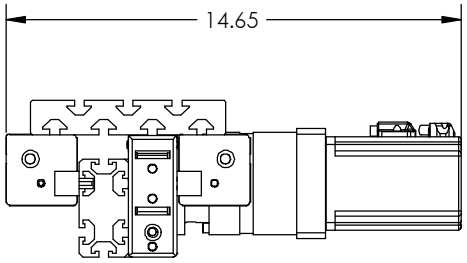

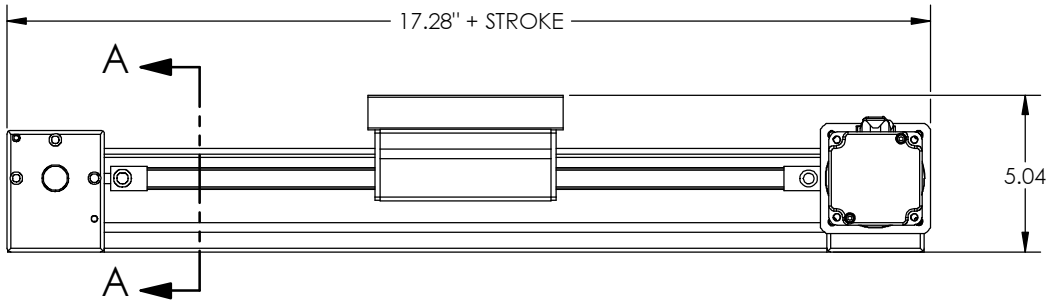

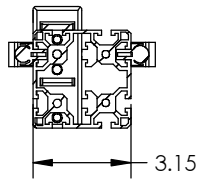

SECTION A-A
SCALE 1 : 4

For more information
Automation4Less
Salisbury, NC
704-639-0710
www.automation4less.com

		UNLESS OTHERWISE SPECIFIED:		NAME	DATE
		DIMENSIONS ARE IN INCHES TOLERANCES: FRACTIONAL ± ANGULAR: MACH ± BEND ± TWO PLACE DECIMAL ± THREE PLACE DECIMAL ±	DRAWN		
			CHECKED		
			ENG APPR.		
			MFG APPR.		
		INTERPRET GEOMETRIC TOLERANCING PER:	Q.A.		
		MATERIAL	COMMENTS:		
NEXT ASSY	USED ON	FINISH			
APPLICATION		DO NOT SCALE DRAWING			

SIZE	DWG. NO.	REV
B	MSA-14S-E-BC-A3-0750 W/ MAS07C30-CB0	
SCALE: 1:8	WEIGHT:	SHEET 1 OF 1

MSA - 14S - G - BC - [ ] [ ] - [ ]

ENTER
OVERALL LENGTH [mm]

SELECT
DRIVE SHAFT LOCATION *

SPECIFY TYPE
A = SINGLE SHAFTED
B = DOUBLE SHAFTED

NOTE: (IF "B" IS USED THE NUMBER WILL DESIGNATE POSITION OF SHORT SHAFT, SECOND SHAFT WILL BE 50.8mm LONG.)

STOCK TRAVEL	OVER ALL LENGTH	TRAVEL
	00750	311
	01000	561
	01250	811
	01500	1061
	01750	1311
	02000	1561
	02250	1811
	CUSTOM TRAVEL	

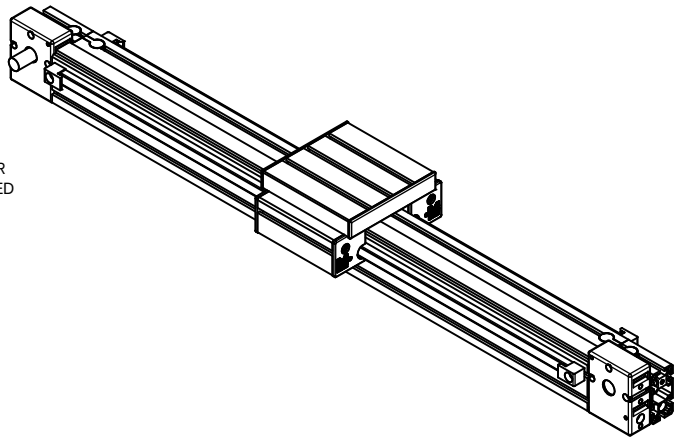

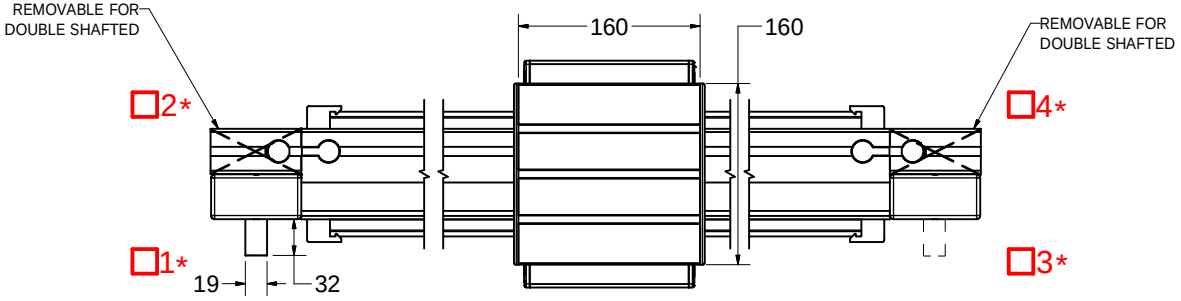

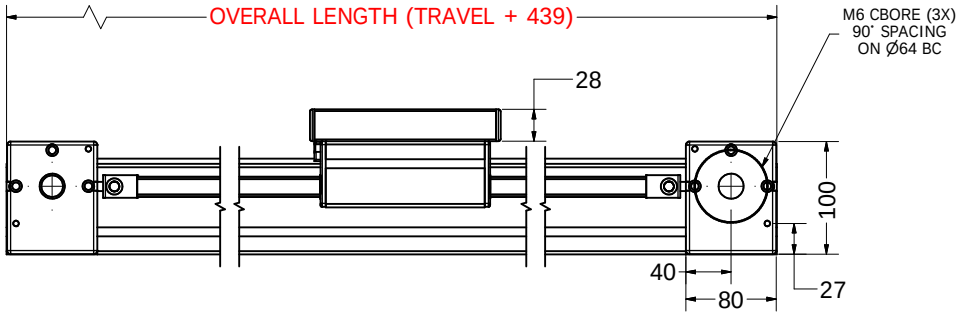

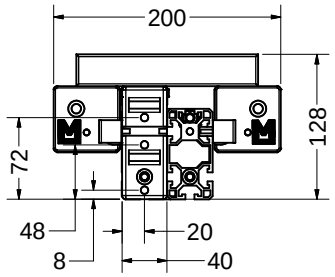

APPROVED:_____

DATE:_____

3RD ANGLE PROJECTION

THIS DRAWING IS THE PROPERTY OF MACRON DYNAMICS INC. ANY REPRODUCTIONS SHALL BE FOR QUOTATION, MANUFACTURING, OR PURCHASING PURPOSES ONLY. RELEASE OF DRAWINGS TO OTHER CONCERNS DOES NOT CONSTITUTE LICENSING IN ANY WAY. INFORMATION CONTAINED HEREIN IS PROPRIETARY AND CONFIDENTIAL.

COMPUTER GENERATED DOCUMENT. MANUAL CHANGES NOT PERMITTED

UNLESS OTHERWISE SPECIFIED ALL DIMENSIONS IN MILLIMETERS

MACRON DYNAMICS, INC.

TITLE
MACRON 14

DWG. NO.
MSA-14S

REV
01

DO NOT SCALE DRAWING | SHEET 1 OF 2

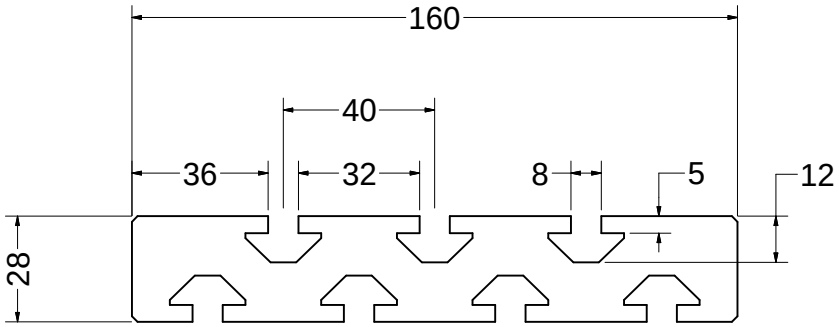

CART MOUNTING
FEATURES T-NUT SLOTS

ACTUATOR BODY
MOUNTING FEATURES
T-NUT SLOTS

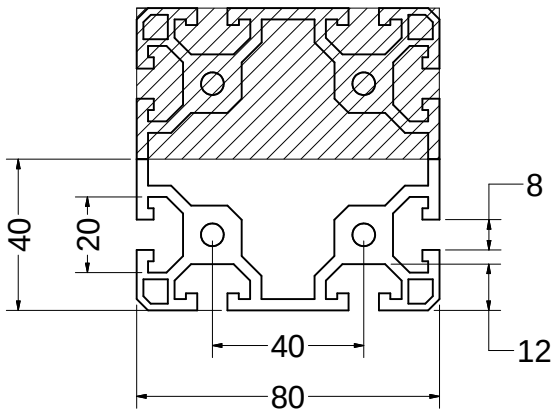

DOUBLE SHAFTED
PULLEY

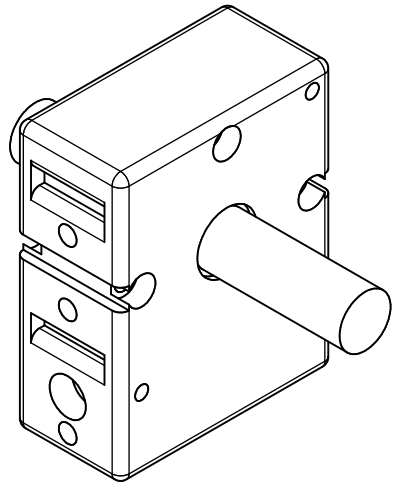

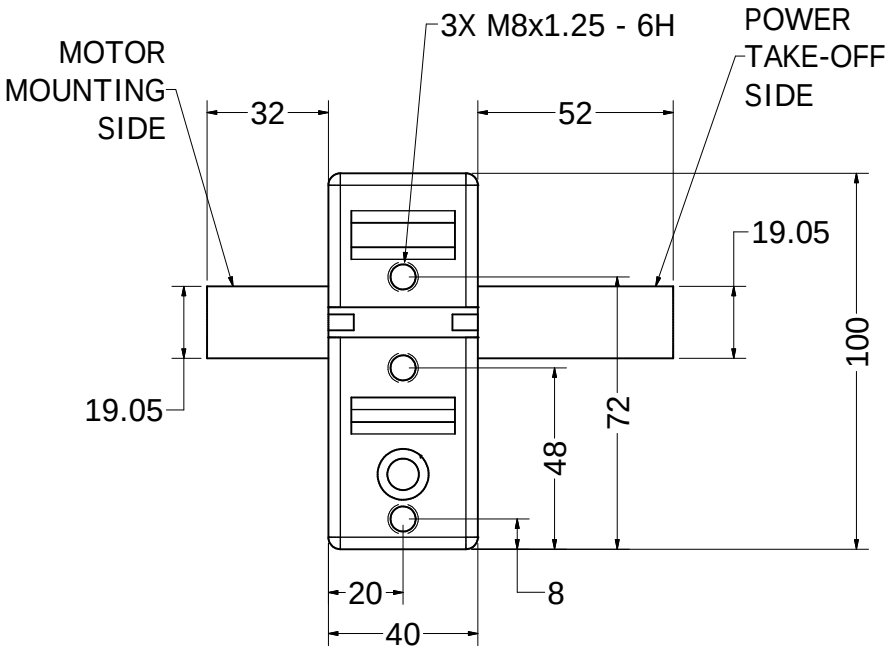

3RD ANGLE PROJECTION

THIS DRAWING IS THE PROPERTY OF MACRON DYNAMICS INC. ANY REPRODUCTIONS SHALL BE FOR QUOTATION, MANUFACTURING, OR PURCHASING PURPOSES ONLY. RELEASE OF DRAWINGS TO OTHER CONCERNS DOES NOT CONSTITUTE LICENSING IN ANY WAY. INFORMATION CONTAINED HEREIN IS PROPRIETARY AND CONFIDENTIAL.

COMPUTER GENERATED DOCUMENT.
MANUAL CHANGES NOT PERMITTED

UNLESS OTHERWISE SPECIFIED ALL
DIMENSIONS IN MILLIMETERS

MACRON DYNAMICS, INC.

TITLE
MACRON 14

DWG. NO.
MSA-14S

REV
01

DO NOT SCALE DRAWING | SHEET 2 OF 2

Macron Dynamics, Inc. - Belt Driven Actuators - Allowable loading

System	System allowable loads																					
	Loads								Moments													
	Dynamic				Static				Dynamic						Static							
	Fz max		Fy max		Foz max		Foy max		Mx max		Mz max		My max		Mox max		Moz max		Moy max			
	[N]	[Lb]	[N]	[Lb]	[N]	[Lb]	[N]	[Lb]	[N-m]	[Lb-in]	[N-m]	[Lb-in]	[N-m]	[Lb-in]	[N-m]	[Lb-in]	[N-m]	[Lb-in]	[N-m]	[Lb-in]	[N-m]	[Lb-in]
Macron SLM	240	54	420	94	200	45	330	74	3.5	31	8.6	76	4.9	44	2.9	26	6.8	60	4.1	36		
Macron MINI-6	240	54	420	94	200	45	330	74	3.4	30	10.7	94	6.1	54	2.9	25	8.4	74	5.1	45		
Macron 6									4.9	43	13.3	118	7.6	67	4.1	36	10.5	93	6.4	56		
Macron 6Z									4.9	43	34.7	307	19.8	175	4.1	36	27.2	241	16.5	146		
Macron 14	1180	265	2770	622	1060	238	2380	535	56.5	500	110.8	980	47.2	418	50.7	449	95.2	842	42.4	375		
Macron 14H									56.5	500	166.2	1470	70.8	626	50.7	449	142.8	1263	63.6	563		
Macron 14Z									56.5	500	360.1	3186	153.4	1357	50.7	449	309.4	2737	137.8	1219		
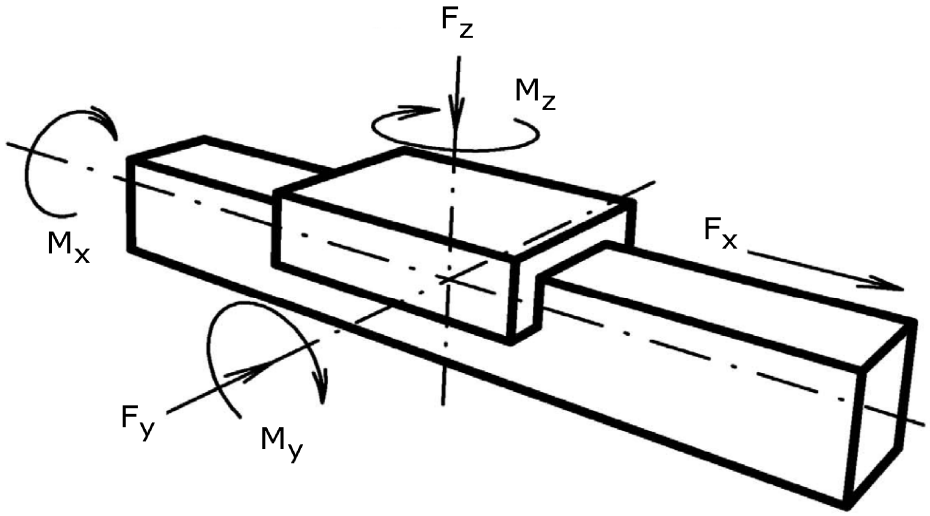
Note: The loads and moments indicated are to be taken as maximum values for individual occurrences and for actuators with beams supported along the entire length. They cannot be added or combined. Please check with Macron Engineering for calculation of equivalent loads under combined loading conditions and for load limits when beams are not fully supported.