Mechanically Joint Type Rodless Cylinder

Series MY2H/2HT

High Precision Guide Type/ø16, ø25, ø40

How to Order

High Precision Guide Type

MY2 H 16 ☐ G – 300 L ☐ – F9N ☐

Guide type

H	High precision guide with single axis
HT	High precision guide with double axis

Bore size

16	16mm
25	25mm
40	40mm

Port thread type

Symbol	Type	Bore size
Nil	M threads	ø16
	Rc	ø25, ø40
TN	NPT	
TF	G	

Piping

G	Centralized piping type (standard)

Stroke

Refer to the standard stroke table.

Number of auto switches

Nil	2 pcs.
S	1 pc.
n	"n" pcs.

Auto switch type

Nil	Without auto switch

∗Refer to the table below for auto switch model numbers.

Stroke adjusting unit position

Nil	Both ends
S	One end

∗"S" is applicable for stroke adjusting units L and H.

Stroke adjusting unit

Nil	Without adjusting unit
L	With low load shock absorber
H	With high load shock absorber
LH	With one L unit and one H unit each

Shock absorbers for L and H units

Model	Unit type \ Bore size (mm)	16	25	40
MY2H	L unit	RB0806	RB1007	RB1412
	H unit	RB1007	RB1412	RB2015
MY2HT	L unit	RB1007	RB1412	RB2015
	H unit	RB1412	RB2015	RB2725

Applicable auto switches/

Refer to pages 28 through 32 for detailed auto switch specifications.

Type	Special function	Electrical entry	Indicator light	Wiring (output)	Load voltage DC		Load voltage AC	Auto switch models: Electrical entry direction: Perpendicular	Auto switch models: Electrical entry direction: In-line	Lead wire length (m)∗ 0.5 (Nil)	3 (L)	5 (Z)	Applicable loads	
Reed switch	–	Grommet	No	2-wire	24V	5V 12V	100V or less	A90V	A90	●	●	–	IC circuit	Relay, PLC
			Yes			12V	100V	A93V	A93	●	●	–	–	
				3-wire (NPN equiv.)	–	5V	–	A96V	A96	●	●	–	IC circuit	–
Solid state switch	–	Grommet	Yes	3-wire (NPN)	24V	12V	–	F9NV	F9N	●	●	–	–	Relay, PLC
				3-wire (PNP)				F9PV	F9P	●	●	–		
				2-wire				F9BV	F9B	●	●	–		
	Diagnostic indication (2-color display)			3-wire (NPN)				F9NWV	F9NW	●	●	○		
				3-wire (PNP)				F9PWV	F9PW	●	●	○		
				2-wire				F9BWV	F9BW	●	●	○		

∗Lead wire length symbols: 0.5m..... Nil (Example) F9NW
3m..... L F9NWL
5m..... Z F9NWZ

∗Solid state switches marked "○" are produced upon receipt of order.

Symbol

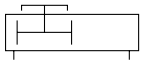

Specifications

Bore size (mm)	16	25	40
Fluid	Air		
Action	Double acting		
Operating pressure range	0.1 to 0.8MPa		
Proof pressure	1.2MPa		
Ambient and fluid temperature	5 to 60°C		
Cushion	Air cushion		
Lubrication	Non-lube		
Stroke length tolerance	$^{+1.8}_{0}$		
Port size	M5 x 0.8	1/8	1/4

Shock Absorber Specifications

Model		RB 0806	RB 1007	RB 1412	RB 2015	RB 2725
Max. energy absorption (J)		2.9	5.9	19.6	58.8	147
Stroke absorption (mm)		6	7	12	15	25
Max. impact speed (mm/s)		1500	1500	1500	1500	1500
Max. operating frequency (cycles/min)		80	70	45	25	10
Spring force (N)	**Extended**	1.96	4.22	6.86	8.34	8.83
	Compressed	4.22	6.86	15.98	20.50	20.01
Operating temperature range (°C)		5 to 60				

Stroke Adjusting Unit Specifications

Bore size (mm)		16		25		40	
Unit symbol		L	H	L	H	L	H
Shock absorber model	**MY2H**	RB0806	RB1007	RB1007	RB1412	RB1412	RB2015
	MY2HT	RB1007	RB1412	RB1412	RB2015	RB2015	RB2725
Stroke fine adjusting range (mm)		0 to −5.6		0 to −11.5		0 to −16	
Stroke adjusting range		When exceeding the stroke fine adjusting range: Use the Made to Order Specifications "-X416" and "-X417". (Refer to page 35 for details.)					

Piston Speed

Bore size (mm)		16	25	40
Without stroke adjusting unit		100 to 1000mm/s Note 1)		
Stroke adjusting unit	L unit and H unit	100 to 1500mm/s		

Note 1) When exceeding the air cushion stroke ranges on page 7, the **piston speed** should be **100 to 200mm/s.**
Note 2) Use at a piston speed within the absorption capacity range. Refer to page 7.

Standard Strokes

Bore size (mm)	Standard stroke (mm) *	Maximum manufacturable stroke (mm)
16	50, 100, 150, 200, 250, 300, 350, 400, 450, 500, 550, 600	1000
25, 40		1500

* Strokes are manufacturable in 1mm increments, up to the maximum stroke. However, add "-XB10" to the end of the part number for non-standard strokes from 51 to 599. Also when exceeding a 600mm stroke, specify "-XB11" at the end of the model number.
Refer to the Made to Order Specifications on page 33.

Made to Order Specifications
Refer to pages 33 through 35 for details.

Theoretical Output

Unit: N

Bore size (mm)	Piston area (mm^2)	Operating pressure (MPa)						
		0.2	0.3	0.4	0.5	0.6	0.7	0.8
16	200	40	60	80	100	120	140	160
25	490	98	147	196	245	294	343	392
40	1256	251	377	502	628	754	879	1005

Note) Theoretical output (N) = Pressure (MPa) x Piston area (mm^2)

Weights

Unit: kg

Model	Bore size (mm)	Basic weight	Additional weight per 50mm of stroke	Stroke adjusting unit weight (per unit)	
				L unit	H unit
MY2H	**16**	0.86	0.22	0.03	0.04
	25	2.35	0.42	0.06	0.09
	40	6.79	0.76	0.16	0.22
MY2HT	**16**	1.27	0.31	0.04	0.08
	25	3.70	0.61	0.10	0.18
	40	10.05	1.13	0.27	0.46

Calculation method Example: **MY2H25G-300L**

Basic weight 2.35kg
Additional weight 0.42/50mm
Weight of L unit 0.06kg
Cylinder stroke 300mm
2.35 + 0.42 x 300 ÷ 50 + 0.06 x 2 = Approx. 4.99kg

Options

Stroke adjusting unit numbers

Model	Bore size (mm) / Unit type	16	25	40
MY2H	**L unit**	MY2H-A16L	MY2H-A25L	MY2H-A40L
	H unit	MY2H-A16H	MY2H-A25H	MY2H-A40H
MY2HT	**L unit**	MY2HT-A16L	MY2HT-A25L	MY2HT-A40L
	H unit	MY2HT-A16H	MY2HT-A25H	MY2HT-A40H

Replacement Parts

Drive unit (cylinder) replacement part nos.

Bore size (mm) / Model	MY2H	MY2HT
16	MY2BH16G- Stroke	
25	MY2BH25□G- Stroke	
40	MY2BH40□G- Stroke	

Enter a symbol for port thread type inside □.

Construction

Single axis type/MY2H

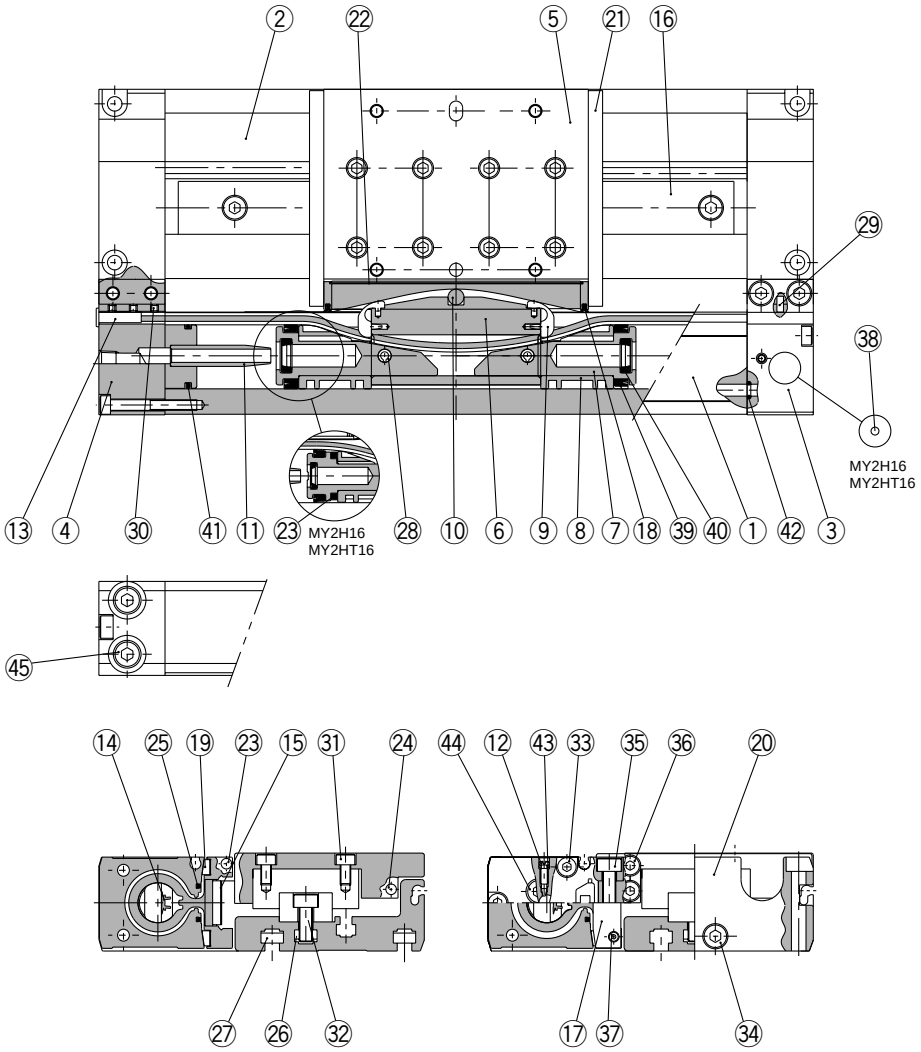

Parts list

No.	Description	Material	Note
1	**Cylinder tube**	Aluminum alloy	Hard anodized
2	**Body**	Aluminum alloy	Hard anodized
3	**Head cover WR**	Aluminum alloy	Hard anodized
4	**Head cover WL**	Aluminum alloy	Hard anodized
5	**Slide table**	Aluminum alloy	Hard anodized
6	**Piston yoke**	Aluminum alloy	Hard anodized
7	**Piston**	Aluminum alloy	Chromated
8	**Wear ring**	Special resin	
9	**Belt separator**	Special resin	
10	**Parallel pin**	Stainless steel	
11	**Cushion ring**	Brass	
12	**Cushion needle**	Rolled steel	Nickel plated
13	**Belt clamp**	Special resin	
16	**Guide**	—	
17	**End cover**	Aluminum alloy	Hard anodized
19	**Bearing**	Special resin	
20	**End plate**	Aluminum alloy	Hard anodized
21	**Stopper**	Carbon steel	Nickel plated after quenching
22	**Top cover**	Stainless steel	

Parts list

No.	Description	Material	Note
23	**Magnet**	Rare earth magnet	
24	**Magnet**	Rare earth magnet	
25	**Seal magnet**	Rubber magnet	
26	**Square nut**	Carbon steel	Nickel plated
27	**Square nut**	Carbon steel	Nickel plated
28	**Spring pin**	Carbon tool steel	Black zinc chromated
29	**Parallel pin**	Stainless steel	
30	**Hexagon socket head set screw**	Chrome molybdenum steel	Black zinc chromated
31	**Hexagon socket head button bolt**	Chrome molybdenum steel	Nickel plated
32	**Hexagon socket head button bolt**	Chrome molybdenum steel	Nickel plated
33	**Hexagon socket head button bolt**	Chrome molybdenum steel	Nickel plated
34	**Hexagon socket head button bolt**	Chrome molybdenum steel	Nickel plated
35	**Hexagon socket head button bolt**	Chrome molybdenum steel	Nickel plated
36	**Hexagon socket head button bolt**	Chrome molybdenum steel	Nickel plated
37	**Hexagon socket head button bolt**	Chrome molybdenum steel	Nickel plated
38	**Steel ball**	Spring steel	Nickel plated
44	**Hexagon socket head taper plug**	Carbon steel	Nickel plated (ø16: Hexagon socket head plug)
45	**Hexagon socket head taper plug**	Carbon steel	Nickel plated (ø16: Hexagon socket head plug)

Double axis type/MY2HT

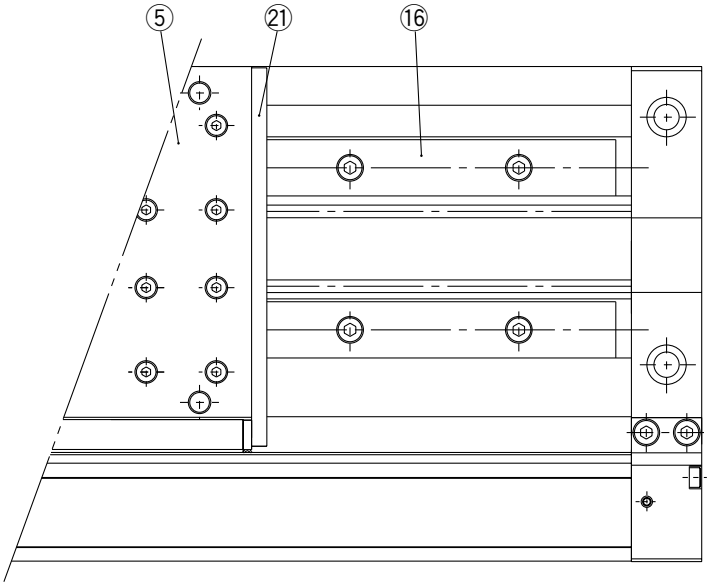

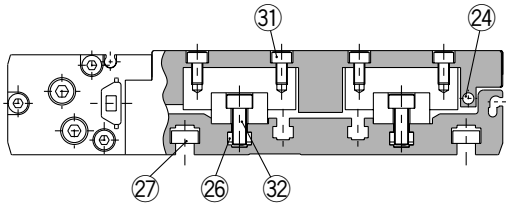

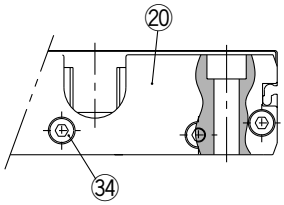

Seal list

No.	Description	Material	Qty.	MY2H16G/MY2HT16G	MY2H25G/MY2HT25G	MY2H40G/MY2HT40G
14	**Seal belt**	Special resin	1	MY16-16A-Stroke	MY2H25-16A-Stroke	MY2H40-16A-Stroke
15	**Dust seal band**	Stainless steel	1	MY2H16-16B-Stroke	MY2H25-16B-Stroke	MY2H40-16B-Stroke
18	**Scraper**	Special resin	2	MYH16-15AR4900	MYH25-15AR4901	MYH40-15AR4902
39	**Piston seal**	NBR	2	GMY16	GMY25	GMY40
40	**Cushion seal**	NBR	2	MYB16-15-A7163	RCS-8	RCS-12
41	**Tube gasket**	NBR	2	P12	TMY-25	TMY-40
42	**O-ring**	NBR	4	ø6.2 x ø3 x ø1.6	P-5	C-9
43	**O-ring**	NBR	2	ø4 x ø1.8 x ø1.1	ø4 x ø1.8 x ø1.1	ø7.15 x ø3.75 x ø1.7

Single Axis Type Ø16, Ø25, Ø40

MY2H Bore size **G** — Stroke

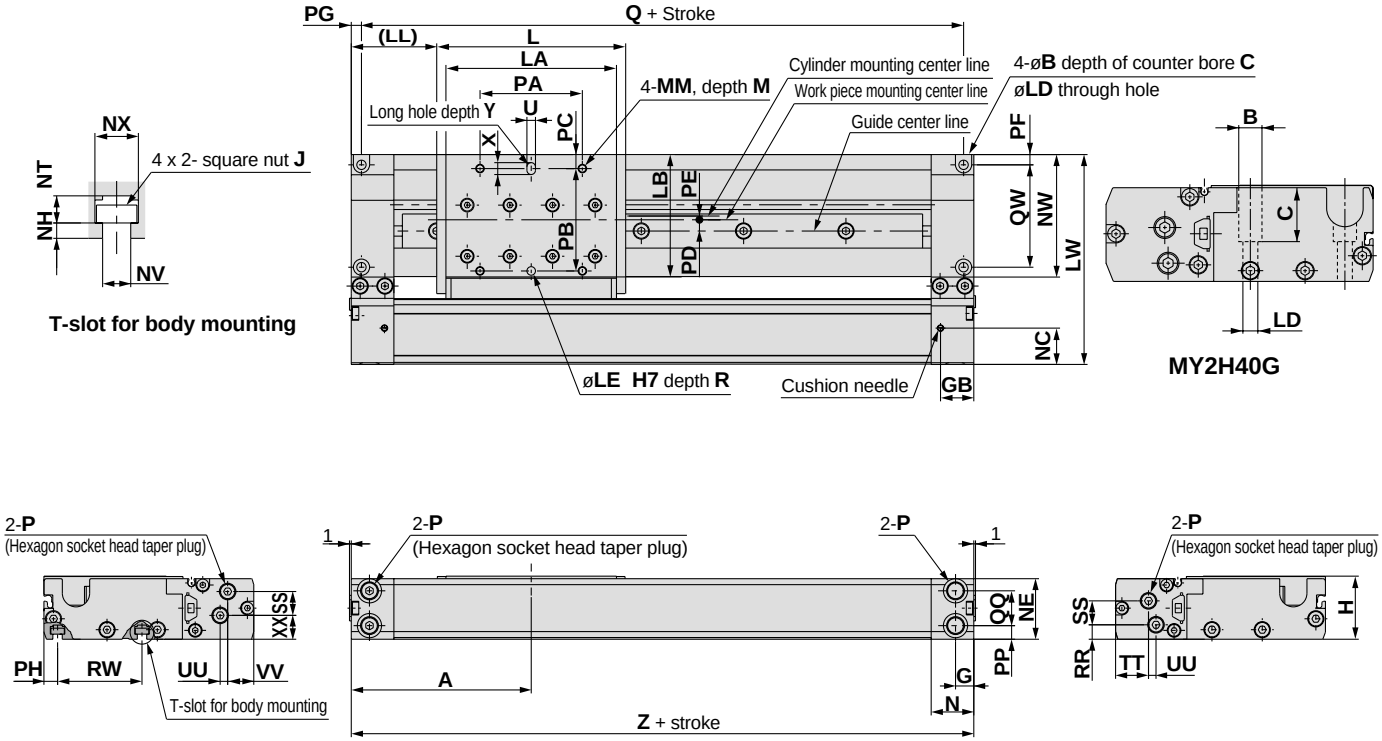

(mm)

Model	A	B	C	G	GB	H	L	J	LA	LB	LD	LE	(LL)	LW	M	MM	N	NC	NE	NH	NT	NV	NW	NX	P
MY2H16G	80	6.5	3.3	8.5	17	28	80	M3 x 0.5	70	50.4	3.4	4	40	83	7	M4 x 0.7	20	14	27	2	3.5	3.4	48.2	5.8	M5 x 0.8
MY2H25G	105	9.5	5.4	10.7	19.5	37	110.8	M5 x 0.8	100	71.7	5.5	5	49.6	123	9	M5 x 0.8	25	21.3	35.5	3	5.3	5.5	71.8	8.5	$^{1}/_{8}$
MY2H40G	165	14	32.5	15.5	31.5	58	180	M6 x 1	158	80.3	9	6	75	161	13	M6 x 1	40	32.4	56.5	4	6.5	6.6	82.1	10.5	$^{1}/_{4}$

Model	PA	PB	PC	PD	PE	PF	PG	PH	PP	Q	QQ	QW	R	RR	RW	SS	TT	U	UU	VV	X	XX	Y	Z
MY2H16G	40	40	7.2	2.8	3.7	3.5	4	5.1	5.3	152	16.4	40	5	5.3	40	9.7	12.5	4	3	10.5	6	12	5	160
MY2H25G	60	60	8.2	6.6	2.7	5.5	6	7.5	8	198	20.4	60	5	8.5	50	14	19.3	5	4.4	15.3	7.5	14	5	210
MY2H40G	100	70	5.5	8.5	5	17	9	9.5	16	312	25.5	57	8	11	53.5	21.5	35.4	6	2	29	9	23	8	330

"P" indicates cylinder supply ports. ∗The plug for "P" MY2H16G is a hexagon socket head plug.

Stroke adjusting unit

Low load shock absorber

MY2H Bore size G — Stroke L

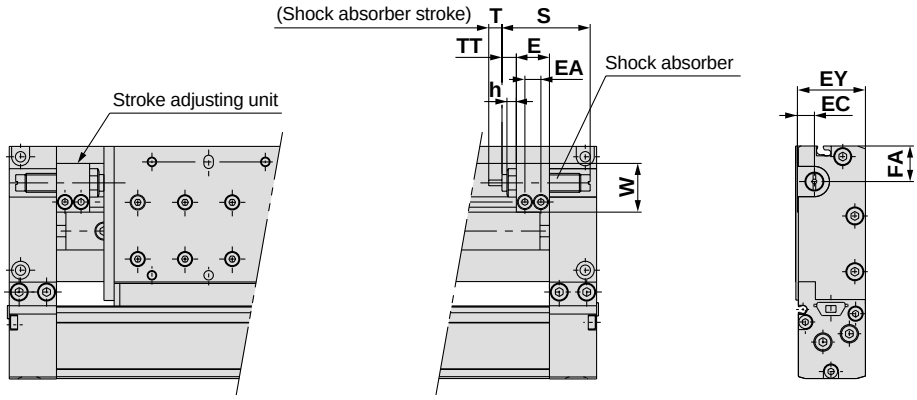

Applicable cylinder	E	EA	EC	EY	FA	h	S	T	TT	W	Shock absorber model
MY2H16	14.4	7	6	27	12.5	4	40.8	6	5.6 (MAX. 11.2)	16.5	RB0806
MY2H25	17.5	8.5	9	36	19.3	5	46.7	7	7.1 (MAX. 18.6)	25.8	RB1007
MY2H40	25	13	13	57	17	6	67.3	12	10 (MAX. 26)	38	RB1412

High load shock absorber

MY2H Bore size G — Stroke H

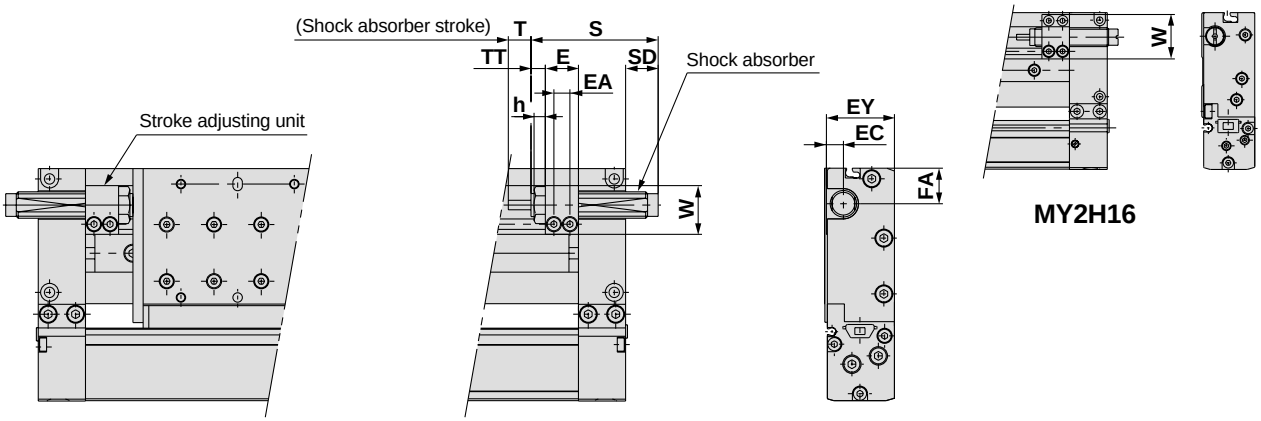

Applicable cylinder	E	EA	EC	EY	FA	h	S	SD	T	TT	W	Shock absorber model
MY2H16	14.4	7	6	27	12.5	—	46.7	6.7	7	5.6 (MAX. 12)	23.5	RB1007
MY2H25	17.5	8.5	9	36	19.3	6	67.3	17.7	12	7.1 (MAX. 18.6)	25.8	RB1412
MY2H40	25	13	13	57	17	6	73.2	—	15	10 (MAX. 6)	38	RB2015

Double axis type ø16, ø25, ø40

MY2HT Bore size G—Stroke

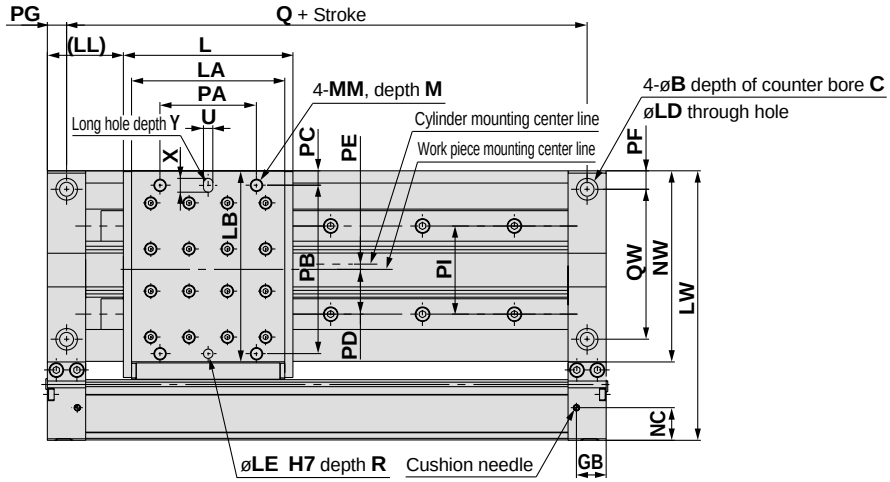

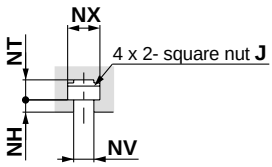

T-slot for body mounting

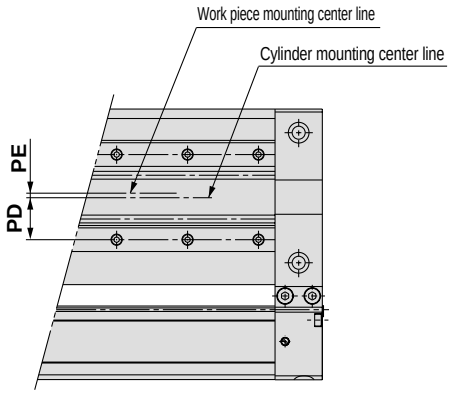

MY2HT40G

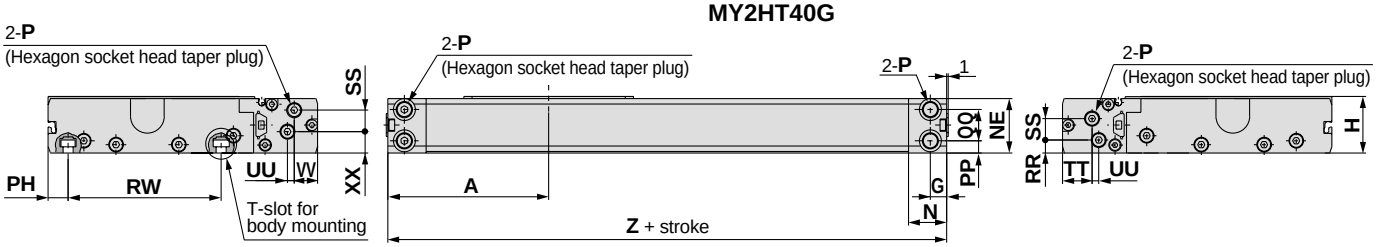

Model	A	B	C	G	GB	H	L	J	LA	LB	LD	LE	(LL)	LW	M	MM	N	NC	NE	NH	NT
MY2HT16G	80	9.5	5.4	8.5	17	28	80	M4 x 0.7	70	87.4	5.5	5	40	120	9	M5 x 0.8	20	14	27	3	4.7
MY2HT25G	105	14	8.6	10.7	19.5	37	110.8	M6 x 1	100	124.7	9	6	49.6	176	12	M8 x 1.25	25	21.3	35.5	4	6.5
MY2HT40G	165	17.5	10.8	15.5	31.5	58	180	M8 x 1.25	158	148.3	11	8	75	229	16	M10 x 1.5	40	32.4	56.5	5	9

Model	NV	NW	NX	P	PA	PB	PC	PD	PE	PF	PG	PH	PI	PP	Q	QQ	QW	R	RR	RW	SS	TT
MY2HT16G	4.5	85.2	7.3	M5 x 0.8	44	80	4	23	1	10	10	10.2	41	5.3	140	16.4	66	5	5.3	69	9.7	12.5
MY2HT25G	6.6	124.8	10.5	$^1/_8$	63	110	9.4	29.2	3.4	12	12.5	13	57.6	8	185	20.4	98	8	8.5	100	14	19.3
MY2HT40G	9	150.1	14	$^1/_4$	113	132	8.5	36	0.5	20	20	18.5	72	16	290	25.5	110	12	11	116	21.5	35.4

Model	U	UU	VV	X	XX	Y	Z
MY2HT16G	5	3	10.5	7	12	5	160
MY2HT25G	6	4.4	15.3	9	14	8	210
MY2HT40G	8	2	29	12	23	12	330

"P" indicates cylinder supply ports. ∗The plug for "P" MY2HT16G is a hexagon socket head plug.

Stroke adjusting unit

Low load shock absorber

MY2HT Bore size G — Stroke L

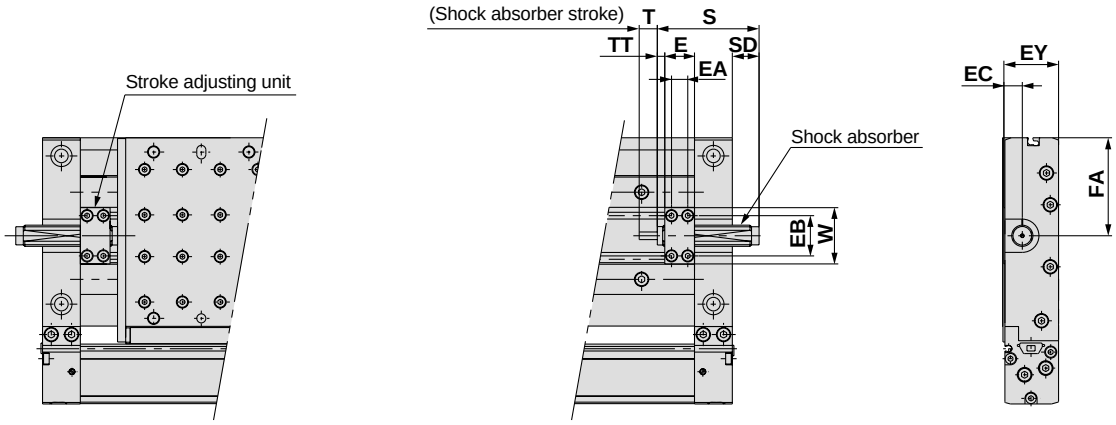

Applicable cylinder	E	EA	EB	EC	EY	FA	S	SD	T	TT	W	Shock absorber model
MY2HT16	14.4	7	21	8	27	46.5	46.7	6.7	7	5.6 (MAX. 11.2)	28.6	RB1007
MY2HT25	19.7	10.7	26.6	16.2	36.2	64.8	67.3	17.7	12	4.9 (MAX. 16.4)	37.2	RB1412
MY2HT40	29.1	15.1	37	17.2	57	74.5	73.2	—	15	5.9 (MAX. 21.9)	51.6	RB2015

High load shock absorber

MY2HT Bore size G — Stroke H

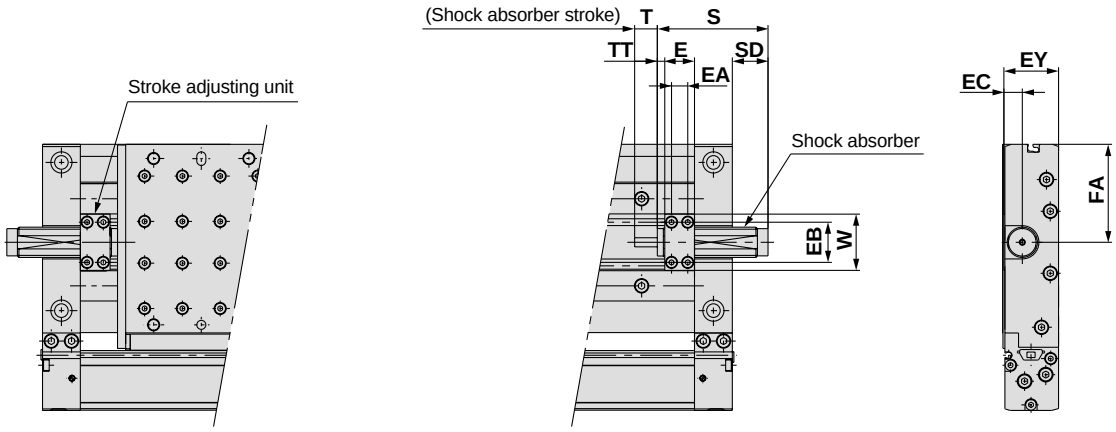

Applicable cylinder	E	EA	EB	EC	EY	FA	S	SD	T	TT	W	Shock absorber model
MY2HT16	14.4	7	21	8	27	46.5	67.3	27.3	12	5.6 (MAX. 11.2)	28.6	RB1412
MY2HT25	19.7	10.7	26.6	11.2	36.2	64.8	73.2	23.6	15	4.9 (MAX. 16.4)	37.2	RB2015
MY2HT40	29.1	15.1	37	17.2	57	74.5	99	24	25	5.9 (MAX. 21.9)	51.6	RB2725

SMC Information

SMC Corporation
1-16-4 Shinbashi, Minato-ku,
Tokyo 105-8659, Japan
URL: http://www.smcworld.com

'03-E503 Issued: December, 2003
D-YGA P-80(YGA)

Solid-state Auto Switches for Direct Mounting
Series D-M9N(V)/D-M9P(V)/D-M9B(V)

Grommet

- Reduced load currents for two-wire model (2.5 to 40 mA)
- Compliance with lead-free requirements
- Use of UL-approved lead wires (style 2844)

Internal circuits

D-M9N/M9NV

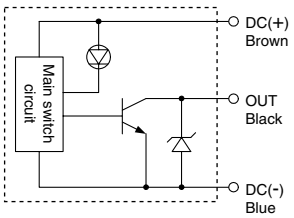

D-M9P/M9PV

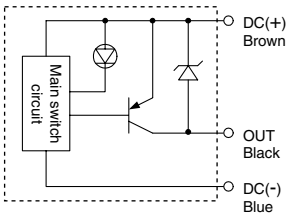

D-M9B/M9BV

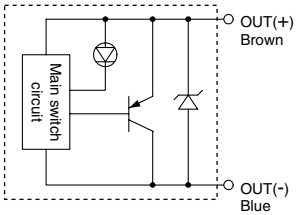

Auto Switch Specifications

PLC: Programmable Logic Controller

D-M9□/D-M9□V (with Indicator light)						
Model number	**D-M9N**	**D-M9NV**	**D-M9P**	**D-M9PV**	**D-M9B**	**D-M9BV**
Electrical entry	In-line	Perpendicular	In-line	Perpendicular	In-line	Perpendicular
Wiring	Three-wire				Two-wire	
Output	NPN		PNP		—	
Applicable load	Integrated circuit, relay and PLC				24 V DC relay and PLC	
Power voltage	5, 12, or 24 V DC (4.5 to 28 V DC)				—	
Current consumption	10 mA or less				—	
Load voltage	28 V DC or less		—		24 V DC (10 to 28 V DC)	
Load current	40 mA or less				2.5 to 40 mA	
Internal voltage drop	0.8 V or less				4 V or less	
Leakage current	100 μA max. at 24 V DC				0.8 mA or less	
Indicator light	Red LED lights when ON.					

- Lead wire: oil-proof heavy-duty vinyl cable
  2.7 x 3.2 with elliptic cross-section, 0.15 mm^2, two cores (D-M9B), or three cores (D-M9N and D-M9P)

Solid state switch specifications

Leakage current	3-wire: 100 μA or less; 2-wire: 0.8 mA max.
Operating time	1 ms or less
Impact resistance	1000 m/s^2
Insulation resistance	50 MΩ or more at 500 V DC (between lead wire and case)
Withstand voltage	1000 V AC for 1 min. (between lead wire and case)
Ambient temperature	−10°C to 60°C
Enclosure	IEC529 standard IP67, JIS C 0920 watertight construction

Weight

Unit: g

Model		D-M9N(V)	D-M9P(V)	D-M9B(V)
Lead wire length (m)	0.5	8	8	7
	3	41	41	38
	5	68	68	63

How to Order

Standard Model Number

D-M9 N V L

Series Model Number

Wiring and output

N	3-wire, NPN
P	2-wire, PNP
B	2-wire

Electrical entry

Nil	In-line
V	Perpendicular

Lead wire length

Nil	0.5m
L	3m
Z	5m

Auto Switch Dimensions

D-M9□

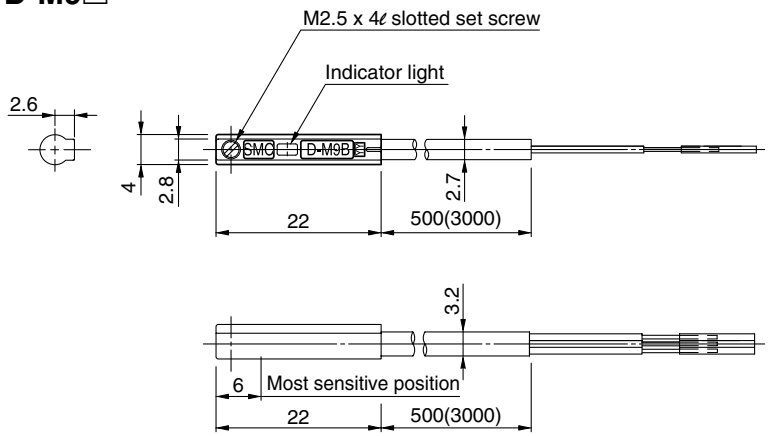

D-M9□V

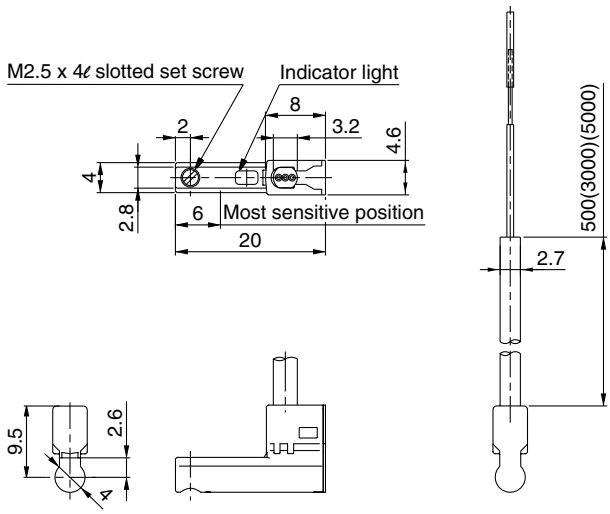

⚠ Specific Product Precautions

Be sure to read before handling. Contact SMC when the required specification is out of range.

Handling

⚠ Caution

Observe the following precautions when handling the product.

- The D-M9 series of auto switches is not overcurrent-protected.
  Faulty wiring or short circuit may result in breakage or burning-out of the switch.
- When stripping the cable clad, be careful about the orientation of the cable being stripped.
  The insulator may be accidentally torn or damaged depending on the orientation, as shown on the right.

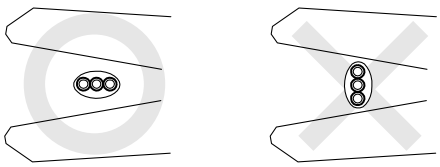

● We recommend the following tools

Manufacturer	Product name	Product number
VESSEL	Wire stripper	No 3000G
Tokyo Ideal	Strip master	45-089

∗ The stripper for the round shape cords (ø2.0) is for a 2-wire style.

● Please do not attach the switch with any other screws than those already attached to the auto switch body.

The operation range is shorter than that of the conventional models.

If the auto switch replaces the conventional model, it may not function depending on its application because the operation range is shorter. Refer to the examples below.

- **In an application where at the end, the stopping position shifting range is larger than the operation range.**
  For example, pushing a work against something, or pressing a work into a hole, or clamping a work.
- **In an application where the auto switch is used to detect an intermediate stopping position. (Detecting time is shortened.)**

Note) Please contact SMC for the operation range details for each actuator.

The switch is damaged instantly when a load is shortened since short circuit protection is not built-in. Pay special attention to avoid reversing the connection of the brown lead of the power supply line and the black output line connection.